PLANNING DESIGN ENVIRONMENT

Site 22 – Carlos Close, Cheadle, Staffordshire Arboricultural Impact Assessment

Report Ref: TEP.3642.003
November 2012

Genesis Centre
Birchwood Science Park
Warrington
WA3 7BH

T: 01925 844004
F: 01925 844002
E: tep@tep.uk.com
W: www.tep.uk.com

Site 22 – Carlos Close, Cheadle, Staffordshire
Arboricultural Impact Assessment
Report Reference: TEP.3642.003
Version 1.0
November 2012

Prepared by:

Rob Taylor
Arboricultural Consultant

TEP
Genesis Centre
Birchwood Science Park
Warrington
WA3 7BH
Tel: 01925 844004
Fax: 01925 844002
e-mail: tep@tep.uk.com

for

Ascent Housing LLP
Apex House
266 Moseley Road
Manchester
M19 2LH

Written:	Checked:	Approved:
RNT	TDP	JGS

Site 22 – Carlos Close: Arboricultural Impact Assessment

CONTENTS **PAGE**

APPENDICES

DRAWINGS

1.0 INTRODUCTION

1.1 TEP has been commissioned by Ascent Housing to conduct an arboricultural survey of land off Carlos Close in Cheadle, Staffordshire. This report details the arboricultural impact of developing the site, subsequent mitigation recommendations and protective measures.

1.2 The survey was carried out in October 2012 by means of inspection from ground level by a qualified Arboricultural Consultant. Trees were assessed in accordance with *BS 5837:2012 Trees in relation to design, demolition and construction – Recommendations.*

1.3 Under the British Standard the assessment of trees is made objectively. The categorisation method identifies the quality and value of the existing tree stock.

1.4 A topographical survey was used to record the position of trees and vegetation (Ref: 12G233/001A Survey Operations). Where the age distribution and species mix of tree cover was relatively uniform, trees were plotted as groups. For the purposes of this report it is assumed that the detail on the drawing is accurate. A number of trees were not shown on the topographical surveys and therefore TEP's surveyor estimated their locations.

1.5 A total of 11 individual trees (T1-T11), 7 groups of trees (G1-G7) and 5 hedgerows (H1-H5) were surveyed and mapped (refer to Drawing 1). All arboricultural information recorded during the survey is presented at Appendix 1.

1.6 The nature of the soils on site was not assessed during the survey. The possibility of soil movement due to tree root activity cannot be discounted. Prior to the undertaking of foundation depth calculations the exact location of all trees in relation to structures will be required.

1.7 This report provides the results of the survey and includes the following:

- A schedule of all trees located on, or within influencing distance of the proposed development site (Appendix 1);
- An assessment based on *BS 5837:2012*, of trees in terms of their potential value within any future development. On the basis of this assessment trees have been categorised into one of four categories: A, B, C or U (Appendices 1 & 2);
- An assessment, based on *BS 5837:2012*, of the requirement for protection of trees during the construction phase (Section 6);
- Advice on removal, retention and management of trees (Sections 5 & 7);
- A Tree Constraints Plan detailing tree quality categories, canopy spreads and Root Protection Areas (**RPA**) for all trees surveyed (Drawing 1); and
- A Tree Removal and Protection Plan detailing the development proposals, trees to be retained and removed and tree protection fencing alignment (Drawing 2).

2.0 THE SITE AND SURROUNDINGS

2.1 The site is situated off Carlos Close on the western fringe of Cheadle town centre in Staffordshire. Surrounding land use is a mixture of residential and small businesses. Cheadle Hospital and Bishop Rawle Primary School lie to the southeast.

2.2 The rear gardens of properties on Bassett Close and Lid Lane mark the southern and western boundaries. The A521 lies to the north of the site and the Manor House hotel is situated to the east.

2.3 The survey area comprises derelict land connected to a small residential development off Carlos Close. It features mainly scrub and grassland and masonry rubble.

2.4 Weather conditions during the survey were dry and sunny.

2.5 Inspection of trees was restricted in some cases by dense vegetation and/or their position on private land. These trees were surveyed insofar as was possible from accessible areas of the site and from the public highway.

Development Proposals

2.6 The proposed development includes the creation of 10 residential plots with associated soft and hard landscaping. Carlos Close will be extended at the southern end with the addition of a small car parking area.

2.7 Detail of the proposals is shown on Drawing 2 and is based on the proposed site plan (Ref: 1393-03) supplied by John McCall Architects.

3.0 STATUTORY PROTECTION AND GUIDANCE

National Planning Policy Framework (NPPF)

3.1 The NPPF assumes protection of all ancient woodland and veteran trees unless it can be clearly demonstrated that the need of, or benefits of, development outweigh the loss. In this respect ancient woodland is defined as an area which has been wooded continuously since at least 1600 AD and a veteran as a tree of exceptional value for wildlife, in the landscape, or culturally because of its great age, size or condition

3.2 On this site there are no ancient woodland or veteran trees.

Tree Preservation Orders & Conservation Area Designations

3.3 Local authorities reserve the right to create Tree Preservation Orders (TPO) to protect the amenity value conferred to a location by a tree or group of trees. Where a TPO is in force, lopping, topping, felling, uprooting or wilful damage caused to a tree is prohibited and such actions may be prosecuted and incur an unlimited fine. Works to TPO protected trees must only be undertaken with the written consent of the local authority.

3.4 Staffordshire Moorlands Council confirmed that at the time of survey, trees T1, T2, T11 and group G1 which flank the site boundary with The Terrace (1 lime, 6 ash, 2 elm and 1 holly) are subject to Tree Preservation Order No.SM254 (2006) Land at Carlos Close, Cheadle.

3.5 The site interior is not subject to Conservation Area status however the eastern extent of Cheadle Conservation Area lies along the eastern boundary. Surveyed trees situated immediately beyond the eastern boundary (T10 and G7) are therefore subject to this designation.

Protected Species – Bats

3.6 Mature trees often contain cavities, crevices and hollows which are a potential habitat for roosting bats. Bats are afforded protection under Schedule 5 of the Wildlife and Countryside Act 1981 (as amended), as well as under Schedule 2 of the Conservation of Species and Habitats Regulations 2010, and as such causing damage to a bat roost constitutes an offence.

3.7 A preliminary ground level appraisal of the wildlife habitat value of each tree was undertaken as part of the arboricultural survey. No trees were noted as having features suitable to support roosting bats.

3.8 Should the presence of a bat roost be suspected whilst undertaking works on any other trees and groups on site, operations must be halted until a licensed bat handler or ecologist can provide advice.

Protected Species - Birds

3.9 Trees are a potential habitat for nesting birds, which (as well as their nests and eggs) are protected under the *Wildlife and Countryside Act 1981* (as amended). This makes it an offence to intentionally or recklessly, damage or destroy an active birds nest or any part thereof.

3.10 Due to the suitability of the trees within the survey boundary for nesting birds, all tree work should ideally be undertaken outside the bird nesting season (British bird nesting season: March to August inclusive).

3.11 If this is not possible then a detailed inspection of each tree should be undertaken by a qualified ecologist immediately prior to the arboricultural works. Should an active nest be found (being built, containing eggs or chicks) then any work likely to affect the nest must be halted and a working boundary of 5m left intact around the nest until the nest becomes inactive.

National House Building Council

3.12 This report has been written in accordance with, and to satisfy the requirement of *BS 5837:2012*.

3.13 The nature of the soils on site was not assessed during the survey. The possibility of soil movement due to tree root activity cannot be discounted.

3.14 A number of trees were not shown on the topographical surveys (Ref: 12G233/001A Survey Operations) used to record the position of trees and groups and therefore TEP's surveyor estimated their locations. Prior to the undertaking of foundation depth calculations the exact location of all trees in relation to structures will be required.

3.15 Any discrepancies in tree location or missing trees will require further discussion with a qualified Arboricultural Consultant.

4.0 TREE POPULATION

4.1 A total of 11 individual trees (T1-T11), 7 groups of trees (G1-G7) and 5 hedgerows (H1-H5) were recorded within influencing distance of the site. A schedule of all trees and groups in terms of species, condition, age, management recommendations and *BS 5837:2012* quality categories is provided at Appendix 1.

4.2 The tree population comprises self-seeded scrub in the site interior and middle aged to mature trees positioned along boundaries.

4.3 Group G1 stands parallel to the A521 and to the immediate west of the site entrance. It comprises hawthorn hedgerow remnants and regrowth from ash stumps. The group is generally vigorous and serves to screen the adjacent busy highway from the site interior. Trees T1 (middle aged ash) and T2 (middle aged wych elm) are positioned to the west of G1. Both are growing atop a low dry stone wall and are vigorous trees with no significant visible defects.

4.4 Trees T3 (middle aged silver birch), T4 (middle aged Norway maple) and T5 (middle aged goat willow) are within a private garden beyond the western site boundary. T5 has previously been topped leaving torn branch stubs and decay. T3 and T4 have reasonable form and are in good physiological condition.

4.5 A notable stand of trees lies along the eastern site boundary. Dense cypress trees are present alongside laburnum, holly and ash. Tree T10 is a mature ash and is the most significant tree in this area being broad, dominant and vigorous.

4.6 Young and vigorous self-seeded trees consisting of willow species and ash (groups G2, G3 and G4) are scattered around the site interior.

4.7 The five hedgerows recorded during the survey comprise cypress species (H1, H2, H4 and H5) and cherry laurel (H3) and lie along the site boundary with adjacent residential properties.

4.8 Tree, group and hedge locations, their quality categories and canopy spreads are shown on Drawing 1.

Tree Quality Categorisation

4.9 Under *BS 5837:2012 Trees in relation to design, demolition and construction – Recommendations* trees and groups are objectively assigned a quality category designed to quantify their value within any future development. Table 1 (overleaf) presents a summary of the categories presented in the British Standard. The full table has been reproduced at Appendix 2.

Table 1: Summary of *BS 5837:2012* tree quality categorisation criteria

Category A	Trees of high value including those that are particularly good examples of their species and/or those that have visual importance or significant conservation or other value
Category B	Trees of moderate value including those that do not qualify as Category A due to impaired condition and/or those that collectively have higher value than they would as individuals; also trees with material conservation or other value
Category C	Trees of low value including those with very limited merit or impaired condition; trees offering transient or temporary landscape benefits
Category U	Trees with irremediable defects and anticipated early loss due to collapse; dead trees or those in immediate decline and those with infection pathogens that threaten other trees

5.0 IMPACTS OF THE PROPOSED DEVELOPMENT

5.1 Table 2 lists the number and quality of trees that will require removal in order to facilitate the development proposals and those that can be retained. This is the result of an assessment based on the proposed site plan and discussions with the client regarding their application strategy.

5.2 Hedgerows have not been afforded a quality value as they do not fall within the categorisation criteria of *BS 5837:2012.*

Table 2: Arboricultural implications of the proposed development

	Tree Quality Category				
	A	**B**	**C**	**U**	**Hedge**
Trees, groups and hedges that can be retained	-	T2, G1	-	-	H1, H2, H3, H4,
Trees, groups and hedges that require removal to facilitate development	-	-	T8, T9, G2, G3, G4, G5	-	-
Trees located on third party land	T10, T11	T1, T3, T4, T6, T7, G7	T5, G6	-	H5

See Appendix 1, Arboricultural Data Sheets for subcategories

5.3 2 individual trees and 4 tree groups must be removed to facilitate the development proposals. These are all low value and comprise mainly self-set willow and ash in the site interior.

5.4 No hedgerow will need to be removed to facilitate the development proposals.

5.5 Trees to the immediate west of the entrance to Carlos Close (T1, T2 and G1) will be retained under the current proposals.

5.6 All third party trees will be retained.

5.7 Fencing to protect the retained trees will be necessary. This will reduce the useable area for works and storage of materials during development.

5.8 Where planning permission is granted, the retention schedule shown in Table 2 and Drawing 2 would normally form a part of that permission. Any change to this schedule would therefore be likely to require an application to vary the consent.

6.0 TREE PROTECTION REQUIREMENTS

Root Protection Areas

6.1 As per *BS 5837:2012*, the **Root Protection Area (RPA)** is calculated using each tree's diameter at 1.5 metres (refer to Appendix 1) and represents the minimum area around each tree that must be left undisturbed to ensure their survival.

6.2 Tree roots typically spread two times the width of the crown, although this figure may be significantly increased for certain species and where specific ground conditions are present. The majority of tree roots are found in the top 600 mm of soil and most of the fine roots that absorb water and nutrients are found in the top 100 mm.

6.3 The morphology of roots is influenced by past and present site conditions (the presence of roads, structures and underground services), soil type, topography and drainage. This means that a tree's roots may not be uniform in their extent and the **RPA** may not be a circular area centred on the tree stem.

6.4 Barriers to growth are likely to be tarmac areas such as The Terrace and the car park on the northern boundary. Roots are unlikely to be absent in all these areas but where unfavourable conditions exist, growth will certainly be impeded.

6.5 The **RPA** may be adjusted or offset to most accurately represent the likely spread of roots for each individual tree (refer to Drawing 1).

Protective Fencing and Exclusion Zones

6.6 Temporary protective barrier fencing will be required to demarcate a **Construction Exclusion Zone (CEZ)** around retained trees. This must be put in place prior to the commencement of any development works, including bringing machinery or materials onto site, the erection of site huts.

6.7 The **CEZ** acts to protect both tree roots and branches and has been extended to incorporate canopy spread where appropriate.

6.8 Protective fencing alignment is shown on Drawing 2 and assumes that all trees identified for removal have been felled prior to installation.

6.9 The fencing must be fixed into the ground to withstand accidental impact from machinery and to ensure that a sufficient protective area is maintained. Details of recommended protective fencing are shown on Drawing 3.

6.10 A weatherproof notice stating 'Construction Exclusion Zone – Keep Out' must be fixed to each fencing panel. An example notice is shown on Drawing 3.

6.11 Any alteration to the fencing alignment to allow for approved activities will be made in agreement with the council's Arboricultural Officer.

6.12 The protective fencing must not be removed until the physical construction phase has been completed and all vehicles have been removed from site, to the satisfaction of the council's Arboricultural Officer.

Ground Contamination

6.13 Storage areas for liquids such as fuels, oil or paint should not be located within 10m of any trees on or within proximity to the site due to the risk of soil contamination caused by accidental spillage.

6.14 Particular care must be taken when working on or close to sloping ground to avoid unintentional runoff into the rooting area of retained trees.

Underground Utility Issues

6.15 No utility drawings were provided and no assessment has been made of the juxtaposition of tree roots and the likely location of new services. It has been presumed for the purposes of this report that all utilities will be installed outside of the tree protective fencing area shown on Drawing 2.

6.16 Where the installation of services within the **Construction Exclusion Zone** of retained trees is unavoidable, appropriate work methods will be required to ensure the safe long-term survival of those trees. This process will require additional consultation with a qualified Arboricultural Consultant and is likely to be more expensive than conventional trench installation.

Ground Level Changes

6.17 A rise or reduction in soil level can have major implications on the longevity and health of the trees. Minor changes (up to 100mm) can be tolerated in some cases but is heavily dependent on tree species, condition and growing environment.

6.18 Existing ground levels within the **Construction Exclusion Zone** should be respected as far as is reasonably practicable. The advice of a qualified Arboricultural Consultant should be sought if level changes are required.

7.0 MANAGEMENT RECOMMENDATIONS

Arboricultural Method Statement

7.1 An **Arboricultural Method Statement (AMS)** will be required where landscaping and boundary treatment activities are proposed within the Root Protection Areas (RPA) of retained trees. Under the current proposals this applies to trees T1, T2 and G1 along the northern boundary, T3, T4 and T5 on third party land to the southwest of the site and T10 and G7, beyond the eastern site boundary.

7.2 The purpose of an **AMS** is to demonstrate that the proposed operations can be undertaken with minimal risk of adverse impact on trees to be retained. It will set the parameters within which construction will need to be undertaken and will guide the actions of site operatives.

7.3 Construction methods presented in an **AMS** are likely to be the result of collaboration between an Arboricultural Consultant and other project specialists. This process may result in the use of un-conventional building techniques and those allowing more control over soil and root disturbance.

Pre-start Site Meeting

7.4 To reinforce the required tree protection measures and avoid the requirement for ongoing arboricultural supervision a pre-start meeting should be arranged between the site contractor, a qualified Arboricultural Consultant and the council's Arboricultural Officer.

7.5 During the meeting the alignment of protective fencing will be marked out, the RPA of retained trees will be marked out and any technical or logistical issues discussed.

Mitigation for the removal of trees

7.6 2 individual trees and 4 groups of trees require removal to facilitate the development proposals. Mitigation for their loss and associated habitat may be required in the form of replacement tree planting.

7.7 The proposals indicate that new ornamental tree planting will take place in rear gardens of the properties and adjacent car parking areas. Suitable species include those of a small to medium mature size such as field maple, wild service, silver birch and ornamental maple species.

7.8 Aftercare is vital to the survival of newly planted trees. Provision should be made for a minimum of two years maintenance of newly planted trees and include watering, formative pruning and the checking of tree ties and stakes.

7.9 The National Planning Policy Framework (NPPF) is a material consideration in the planning process and promotes a presumption in favour of sustainable development. In terms of the natural environment, development should minimise impacts on biodiversity and provide a net gain in biodiversity where possible.

7.10 In respect of trees, a sustainable development will be one whereby the total number, value or function provided by trees is maintained or increased or where the long-term prospects of the existing tree stock can be substantially improved. Net gains in biodiversity may be demonstrated where the number of tree species, variety of tree ages or range of niche habitats can be increased. Native, old, large or dead trees are likely to have a relatively significant impact on a scheme's environmental credentials, as will the connectivity of trees, hedges and woodland.

7.11 It is the recommendation of this report that mitigation in the form of tree planning has the potential to result in a net gain in long-term tree cover (estimated at 40 years post-construction). This is wholly dependent on appropriate species selection, tree quality and high establishment rates.

7.12 The extent of mitigation planting will ultimately be determined in agreement with Staffordshire Moorlands Council.

Post Construction Tree Care

7.13 Hazard recommendations are based on observations at the time of survey. Trees are dynamic living organisms whose structure is constantly changing. Even those in good condition can suffer from damage or stress. Following site development, regular (annual or biennial) inspections of all retained trees should be undertaken by a qualified Arboricultural Consultant.

8.0 SUMMARY

8.1 Based on an objective assessment made in accordance with *BS 5837:2012 Trees in relation to design, demolition and construction – Recommendations*, there are 2 Category A, 8 Category B and 8 Category C trees or groups on or within influencing distance of the site.

8.2 2 individual trees and 4 tree groups must be removed to facilitate the development proposals. These are all low value and comprise mainly natural willow and ash regeneration in the site interior.

8.3 Staffordshire Moorlands Council confirmed that at the time of survey, 1 lime, 6 ash, 2 elm and 1 holly which flank the site boundary with The Terrace are subject to Tree Preservation Order No.SM254 (2006). All these trees can be retained under the current proposals.

8.4 Trees situated immediately beyond the eastern boundary stand within Cheadle Conservation Area.

8.5 No trees were found to have features of a size and condition desirable to bats and/or owls.

8.6 Protective barrier fencing will be required to demarcate a Construction Exclusion Zone (**CEZ**) around retained trees prior to the commencement of development. Fencing alignment is shown on Drawing 2 and details of the recommended Heras fencing are shown on Drawing 3. This will restrict movements on the site which should be considered early in the construction process.

8.7 An Arboricultural Method Statement (AMS) will be required where landscaping and boundary treatment activities are proposed within the Root Protection Areas (RPA) of retained trees.

8.8 Mitigation for their loss and associated habitat may be required in the form of replacement tree planting. The extent of mitigation planting will ultimately be determined in agreement with Staffordshire Moorlands Council.

APPENDIX 1

ARBORICULTURAL SURVEY DATA SHEETS

APPENDIX 1: Arboricultural Survey Data Sheets

Surveyor RNT
Date 17.10.12
Town Cheadle
Site Site 22 - Carlos Close
Dwg Ref D3642.003

Ref	Species	Height	Stem Dia.	No. of stems/ individuals	Crown Spread North	Crown Spread South	Crown Spread East	Crown Spread West	Height of Lowest Branch	Direction of Lowest Branch	Maturity	Condition	Comments on form, condition, health and significant defects	BS5837 Tree Quality Assess.	Radius of RPA guide circle	BS5837 RPA Area	Management Recommendations	Estimated Remaining Contribution	TPO
		(m)	(mm)	arising below 1.5m	(m)	(m)	(m)	(m)	(m)	(m)	Young, Middle Age, Mature	Good, Fair, Poor, Veteran		A,B,C,R (1,2,3)	(m)	(m2)		Long, Medium, Short	(*)
Trees																			
T1	Ash	9.0	340.0	1.0	3.5	3.0	2.0	3.0	2.5	W	Middle Age	Good	Minor branch stubs in lower crown. Growing atop low dry stone wall. Strong central leading stem.	B,1,2	4.1	52.3		Long	☒
T2	Wych elm	9.0	420.0	7.0	5.0	5.0	3.5	4.0	0.5	S	Middle Age	Good	Vigorous multi-stemmed tree. Prolific basal epicormic growth. Growing atop low dry stone wall. Epicormic growth from branch stubs	B,1,2	5.0	79.8		Long	☒
T3	Silver birch	9.0	240.0	1.0	3.5	3.0	2.0	3.0	0.5	W	Middle Age	Good	Located within private garden. Good form and physiological condition. Brickand and rubble piled around root plate.	B,1,2	2.9	26.1		Medium	
T4	Norway maple	5.0	260.0	2.0	2.5	2.5	2.5	2.5	0.5	N	Middle Age	Good	Located within private garden. Bifurcate at base. Included bark at stem unions. Good vitality. No significant visible defects.	B,2	3.1	30.6		Long	
T5	Goat willow	5.0	380.0	4.0	2.0	2.0	2.5	2.0	0.5	E	Middle Age	Fair	Previously topped tree in private garden. 2.5m regrowth. Tears at branch stubs and minor stem decay.	C,1,2	4.6	65.3		Medium	
T6	Sycamore	8.0	430.0	1.0	4.0	4.5	4.0	3.5	3.0	E	Middle Age	Good	Located within private garden. Measurements estimated. Garden ornamental. Good balanced form. Reasonable physiological condition. Minor branch rubbing. No significant visible defects.	B,1,2	5.2	83.6		Long	
T7	Ash	7.0	310.0	1.0	3.5	3.0	2.5	3.0	3.0	N	Middle Age	Good	Located within private garden. Measurements estimated. Garden ornamental. Good balanced form. Reasonable physiological condition. Several small pruning wounds. No significant visible defects.	B,1,2	3.7	43.5		Long	
T8	Ash	3.0	70.0	1.0	0.5	0.5	0.5	0.5	0.5	W	Young	Fair	Self-seeded tree. Growth restricted by neighbouring brick wall and larger conifers to the north.	C,1	0.8	2.2		Medium	
T9	Ash	7.0	260.0	1.0	2.0	2.5	1.5	3.0	0.5	W	Middle Age	Fair	Future growth restricted by brick wall. Reasonable vitality. Included bark at branch unions.	C,1,2	3.1	30.6		Medium	

APPENDIX 1: Arboricultural Survey Data Sheets

Ref	Species	Height	Stem Dia.	No. of stems/ individuals	Crown Spread North	Crown Spread South	Crown Spread East	Crown Spread West	Height of Lowest Branch	Direction of Lowest Branch	Maturity	Condition	Comments on form, condition, health and significant defects	BS5837 Tree Quality Assess.	Radius of RPA guide circle	BS5837 RPA Area	Management Recommendations	Estimated Remaining Contribution	TPO
		(m)	(mm)	arising below 1.5m	(m)	(m)	(m)	(m)	(m)	(m)	Young, Middle Age, Mature	Good, Fair, Poor, Veteran		A,B,C,R (1,2,3)	(m)	(m2)		Long, Medium, Short	(*)
T10	Ash	14.0	740.0	1.0	5.0	5.0	5.0	5.0	0.5	W	Mature	Good	Located on third party land. Broad and dominant tree. Vigorous and with good balanced crown. Woodpecker holes and minor decay at old pruning wounds.	A,1,2	8.9	247.7		Long	
T11	Lime	11.0	720.0	1.0	4.5	5.0	4.0	5.0	2.0	W	Middle Age	Good	Located within private garden. Measurements estimated. Stems bifurcate at 2m. Broad and dominant tree. Good physiological condition. No significant visible defects.	A,1,2	8.6	234.5		Long	☒
Groups																			
G1	Hawthorn, ash	to 9	to 340	20+							Middle Age	Fair	Lapsed hawthorn hedgerow and ash stump regrowth. Stumps cut at 1m high. Some stem unions with included bark. Generally vigorous.	B,2	Refer to Drawing	n/a		Medium	☒
G2	Ash	to 4.5	to 270	4.0							Middle Age	Fair	Ash stump regrowth atop low brick wall. Vigorous.	C,1	Refer to Drawing	n/a		Medium	
G3	Grey willow, goat willow, hawthorn, ash	to 4.5	to 210	5.0							Young to Middle Age	Fair	Self-seeded multi-stemmed trees. Vigorous scrub.	C,1	Refer to Drawing	n/a		Medium	
G4	Grey willow, goat willow, hawthorn, ash	to 5	to 220	20+							Young to Middle Age	Fair	Self-seeded scrub and stump regrowth. Generally vigorous.	C,1	Refer to Drawing	n/a		Medium	
G5	Hawthorn	to 4.5	to 210	2.0							Middle Age	Fair	Dense hawthorn. Possibly hedgerow remnants alongside concrete boundary fence. Large concrete slab on root plate.	C,1	Refer to Drawing	n/a		Long	
G6	Cherry plum, Norway maple	to 2.5	to 80	6.0							Young	Good	Third party trees - recently planted garden ornamentals. Reasonable condition. No significant visible defects.	C,1,2	Refer to Drawing	n/a		Long	
G7	Lawson cypress, Leyland cypress, holly, laburnum	to 8	to 330	20+							Middle Age	Fair	Third party trees alongside boundary. Vigorous and dense conifers. Growth restricted in some cases beneath mature ash.	B,2	Refer to Drawing	n/a		Long	
Hedges																			
H1	Leyland cypress	to 2	0.0								Young	Good	Third party garden boundary hedge. Not yet reached dimensions to require trimming.		Refer to Drawing	n/a			
H2	Lawson cypress, Leyland cypress	to 2.5	0.0								Young to Middle Age	Fair	Gappy boundary hedge. Private land.		Refer to Drawing	n/a			
H3	Cherry laurel	to 3	0.0								Middle Age	Fair	Vigorous laurel boundary hedge.		Refer to Drawing	n/a			
H4	Leyland cypress	to 2.5	0.0								Middle Age	Good	Trimmed garden boundary hedge alongside wooden panel fencing.		Refer to Drawing	n/a			
H5	Cypress species	to 1	0.0								Middle Age	Good	Formal trimmed garden boundary hedge.		Refer to Drawing	n/a			

APPENDIX 2

SURVEY METHOD

APPENDIX 2: SURVEY METHOD

The survey of trees is conducted from ground level only. The nature of the soils on site is not assessed.

Trees are dynamic living organisms with a constantly changing structure; even trees in good condition can suffer from damage or stress. The information recorded is presented as being correct at the time of survey.

The following features of each tree, group of trees or wood may have been recorded in the Arboricultural Survey Data Sheets at Appendix 1.

Species The common name is given. The Latin name may also be given if further clarification is required.

Height Top height of tree recorded in metres.

Stem Diameter For single-stemmed trees the measurement is taken at 1.5 metres above ground level and recorded in millimetres.
For multi-stemmed trees an average all stems measured at 1.5m above ground level is used.
For tree groups a range from minimum to maximum diameters is provided based on measurements taken using one of the aforementioned methods.

No. of Stems A count of stems arising below a height of 1.5 metres.

Crown Spread The N, S, E and W branch spreads are recorded in metres to provide a representative crown shape.

Height of Lowest Branch Crown clearance above ground level recorded in metres.

Direction of Lowest Branch The direction of growth of the first significant branch from the point of attachment.

Maturity

Young	Trees than can reasonably be relocated or replaced like for like, without undue cost;
Middle Age	Trees in the established growth stage of their life with the potential to continue increasing in size;
Mature	Trees that have reached their ultimate size, given their location and surroundings;

Condition **Good, Fair, Poor.** An overall assessment of a tree's physiological and structural state in which factors that may increase its susceptibility to the effects of development are taken into account.

Veteran. Trees that are in such a condition as to significantly increase their biological, cultural or aesthetic value. This is characteristic of, but not exclusive to, individuals surviving beyond the typical age range for the species concerned.

Comments A brief evaluation and description of the tree with comments on form, vitality, health and any significant defects or symptoms of ill-health.

BS 5837 Tree Quality Assessment

The tree quality assessment is based on Table 1 of BS 5837:2012 (See below). Four categories (A, B, C and U) are used to denote tree quality (A = High, B = Moderate, C = Low, U = Unsuitable for retention). Subcategories (1-3) denote the specific function value of the trees and the reasoning behind the allocation of a specific category (the subcategories may be used in combination but do not accumulate collective weight).

Root Protection Area (RPA)

The RPA is allocated to ensure that a sufficient area is left undisturbed during development. It is provided as an area (m^2) and as the radius of a circle (m) typically plotted from the centre of the stem.

The RPA is calculated using a mathematical equation included in BS 5837:2012 (Section 4.6 and Table D.1) and is based on a trees stem diameter. In some cases the RPA may need to be adapted to best reflect the likely area and position of roots required to ensure survival; this may be based on criteria such as the tree's condition, species, crown spread and any barriers to growth. Any alteration must be justifiable but is made at the Arboricultural Consultants discretion.

Recommendations

Recommendations for arboricultural works, etc. are based on the **current** land use, and take into account the tree or group attributes without bias to the proposed development.

Estimated Remaining Contribution An estimation of the life expectancy as healthy functioning tree. This will be influenced by species and the condition of the tree at the time of survey.

Long	> 40 years
Medium	20 – 40 years
Short	less than 20 years

Table 1 Cascade chart for tree quality assessment

Category and definition	Criteria (including subcategories where appropriate)			Identification on plan
Trees unsuitable for retention (see Note)				
Category U Those in such a condition that they cannot realistically be retained as living trees in the context of the current land use for longer than 10 years	• Trees that have a serious, irremediable, structural defect, such that their early loss is expected due to collapse, including those that will become unviable after removal of other category U trees (e.g. where, for whatever reason, the loss of companion shelter cannot be mitigated by pruning) • Trees that are dead or are showing signs of significant, immediate, and irreversible overall decline • Trees infected with pathogens of significance to the health and/or safety of other trees nearby, or very low quality trees suppressing adjacent trees of better quality *NOTE Category U trees can have existing or potential conservation value which it might be desirable to preserve; see 4.5.7.*			See Table 2
	1 Mainly arboricultural qualities	**2 Mainly landscape qualities**	**3 Mainly cultural values, including conservation**	
Trees to be considered for retention				
Category A **Trees of high quality** with an estimated remaining life expectancy of at least 40 years	Trees that are particularly good examples of their species, especially if rare or unusual; or those that are essential components of groups or formal or semi-formal arboricultural features (e.g. the dominant and/or principal trees within an avenue)	Trees, groups or woodlands of particular visual importance as arboricultural and/or landscape features	Trees, groups or woodlands of significant conservation, historical, commemorative or other value (e.g. veteran trees or wood-pasture)	See Table 2
Category B **Trees of moderate quality** with an estimated remaining life expectancy of at least 20 years	Trees that might be included in category A, but are downgraded because of impaired condition (e.g. presence of significant though remediable defects, including unsympathetic past management and storm damage), such that they are unlikely to be suitable for retention for beyond 40 years; or trees lacking the special quality necessary to merit the category A designation	Trees present in numbers, usually growing as groups or woodlands, such that they attract a higher collective rating than they might as individuals; or trees occurring as collectives but situated so as to make little visual contribution to the wider locality	Trees with material conservation or other cultural value	See Table 2
Category C **Trees of low quality** with an estimated remaining life expectancy of at least 10 years, or young trees with a stem diameter below 150 mm	Unremarkable trees of very limited merit or such impaired condition that they do not qualify in higher categories	Trees present in groups or woodlands, but without this conferring on them significantly greater collective landscape value; and/or trees offering low or only temporary/transient landscape benefits	Trees with no material conservation or other cultural value	See Table 2

British Standards Institute 2012, p.9

NOTES:

All young trees are assessed as quality category 'C' but this does not preclude their retention within a development.

For hedges the height, canopy spread and number of stems is recorded but they not assigned a quality category.

DRAWING 1

TREE CONSTRAINTS PLAN

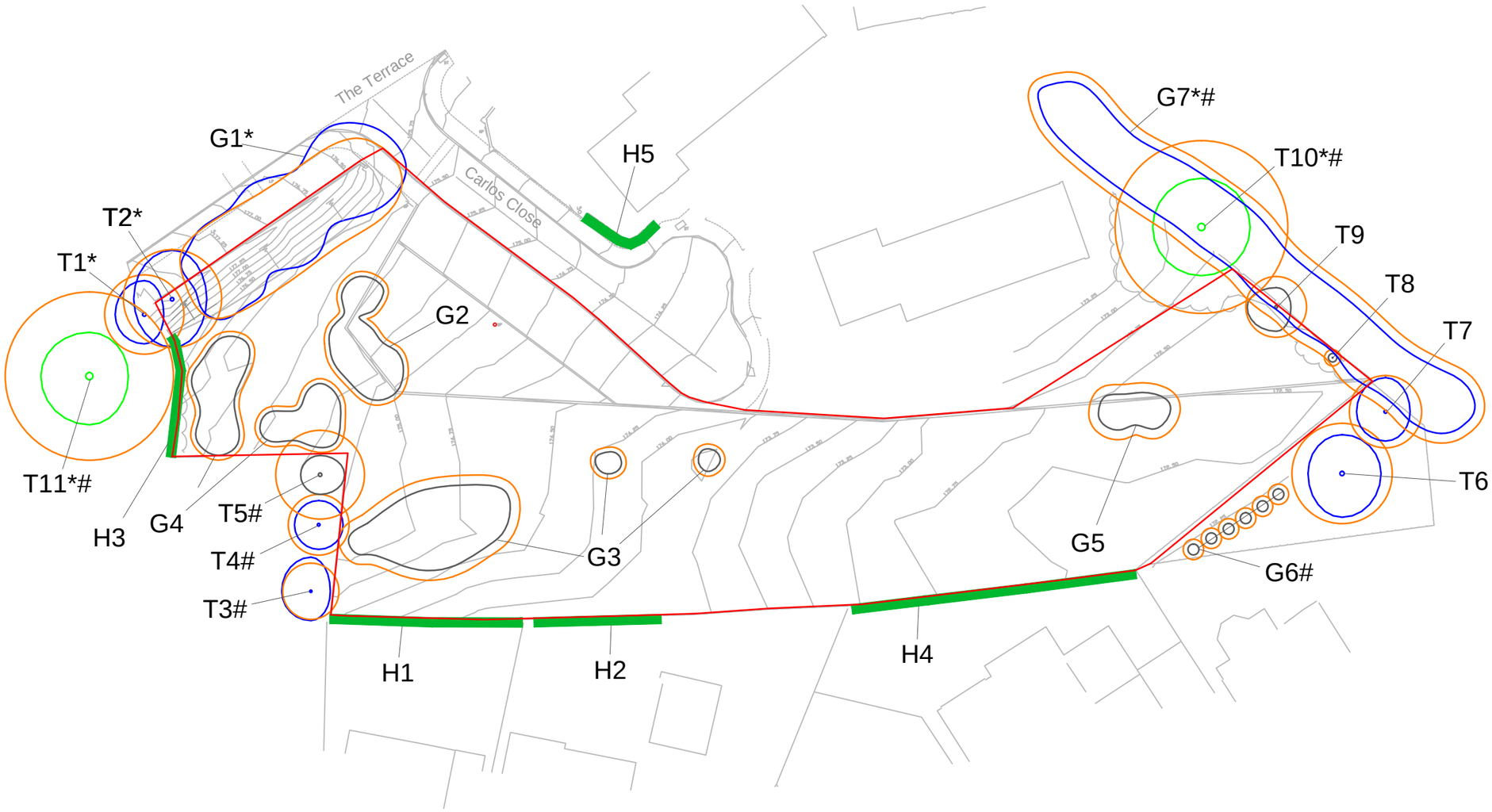

KEY

[This drawing must be reproduced in colour]

- T1 Individual trees
- G1 Groups of trees
- H1 Hedgerow
- Root Protection Area (RPA)
- Site Boundary
- # Approximate location (Feature not shown on topo)
- * Statutory Protection (TPO, Conservation Area)

Tree Categorisation

(Tree quality assessment based on BS 5837:2012 Trees in relation to design, demolition and construction - Recommendations)

- Category A (High quality)
- Category B (Moderate quality)
- Category C (Low quality)
- Category U (Unsuitable for retention)

NOTE: This drawing should be read in conjunction with the respective Arboricultural Data Sheets (Appendix 1).

Rev	Description	Drawn	Approved	Date

TEP

Genesis Centre
Birchwood Science Park Warrington
WA3 7BH
Tel 01925 844004
Fax 01925 844002
e-mail tep@tep.uk.com

Project

Ascent Program Phase 4, Cheadle
Arboricultural Impact Assessment:
Site 22 - Carlos Close

Title

Drawing 1:
Tree Constraints Plan
(Existing)

Drwg No		
D3642.005		
Scale: 1:500 @ A3		Date: 19/10/12
Drawn: RNT	Checked: TDP	Approved: JGS

DRAWING 2

TREE REMOVAL AND PROTECTION PLAN

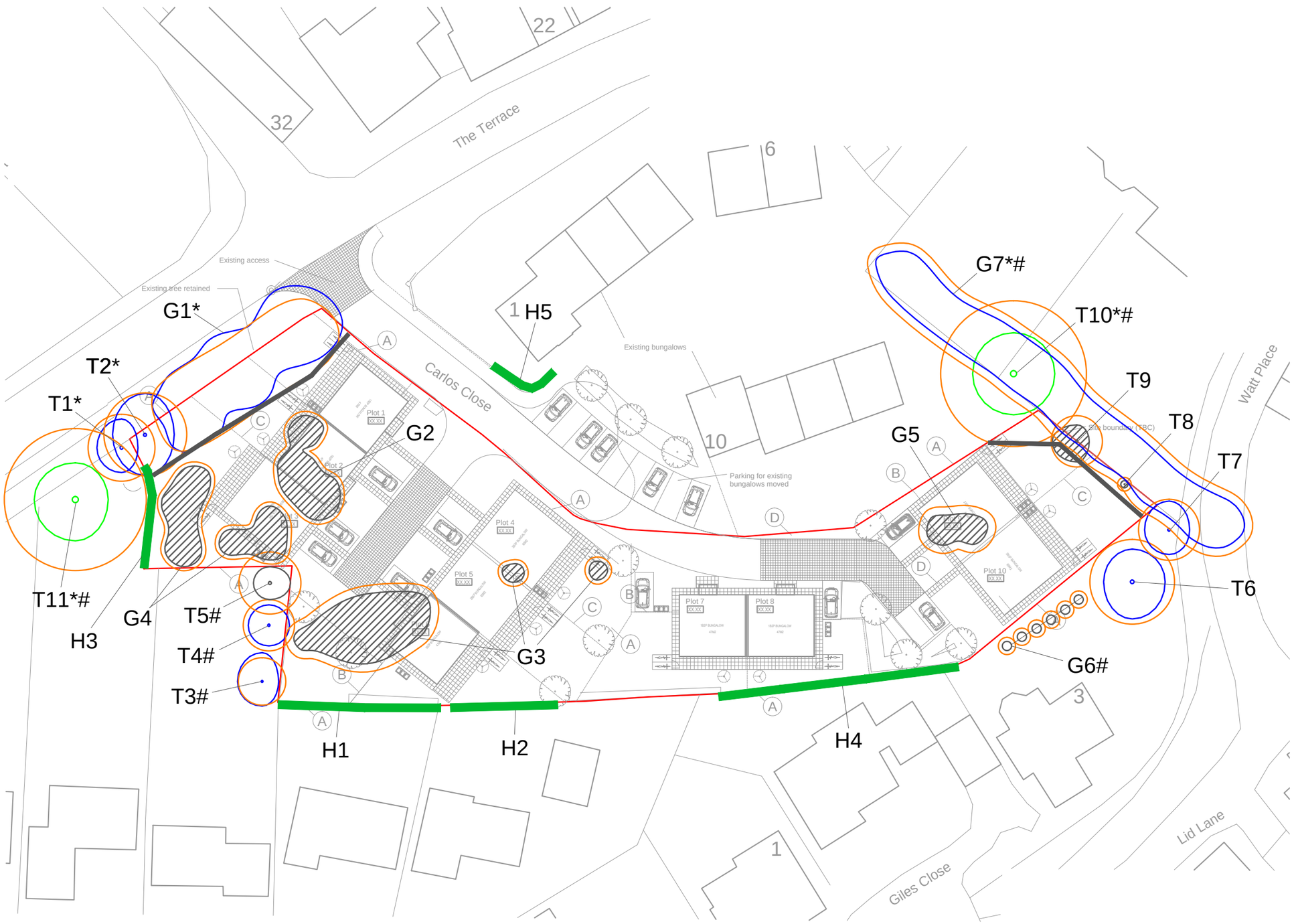

KEY

[This drawing must be reproduced in colour]

- T1 Individual trees
- G1 Groups of trees
- H1 Hedgerow
- Root Protection Area (RPA)
- Development Boundary
- # Approximate location (Feature not shown on topo)
- * Statutory Protection (TPO, Conservation Area)
- Tree Protection Fencing (Must be installed prior to works commencement to define a Construction Exclusion Zone)

Trees to be retained
(Tree quality assessment based on BS 5837:2012 Trees in relation to design, demolition and construction - Recommendations)

- Category A (High quality)
- Category B (Moderate quality)
- Category C (Low quality)
- Category U (Trees with existing or potential conservation value)

Trees to be removed
(Tree quality assessment based on BS 5837:2012 Trees in relation to design, demolition and construction - Recommendations)

- Category A (High quality)
- Category B (Moderate quality)
- Category C (Low quality)
- Category U (Unsuitable for retention)

NOTE: This drawing should be read in conjunction with the respective Arboricultural Data Sheets (Appendix 1).

Rev	Description	Drawn	Approved	Date

TEP
Genesis Centre
Birchwood Science Park Warrington
WA3 7BH
Tel 01925 844004
Fax 01925 844002
e-mail tep@tep.uk.com

Project

Ascent Program Phase 4, Cheadle
Arboricultural Impact Assessment:
Site 22 - Carlos Close

Title

Drawing 2: Tree Removal and Protection Plan (proposed)

Drwg No		
D3642.006		
Scale: 1:500 @ A3		Date: 19/11/12
Drawn: RNT	Checked: TDP	Approved: JGS

DRAWING 3

TEMPORARY TREE PROTECTION FENCING

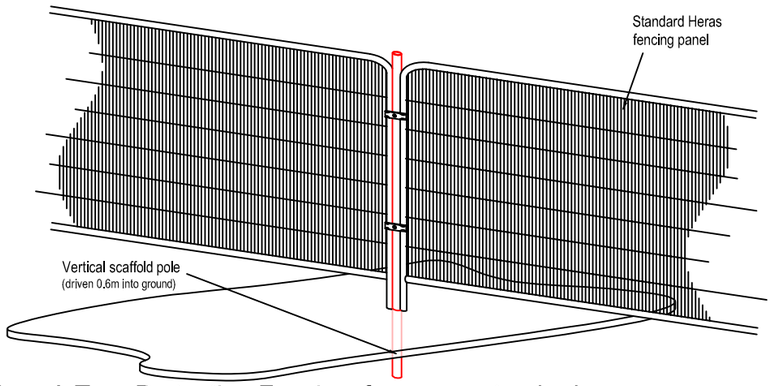

Type A Tree Protection Fencing: for use as standard
(see Tree Protection Plan for layout)

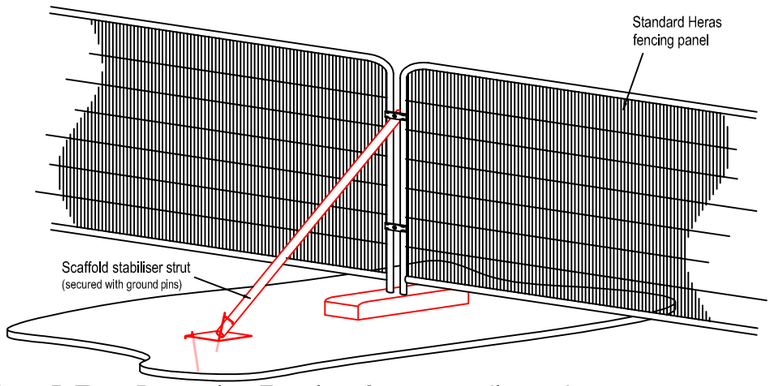

Type B Tree Protection Fencing: for use as directed
(e.g. where Type A would cause unacceptable damage to roots or underground services)

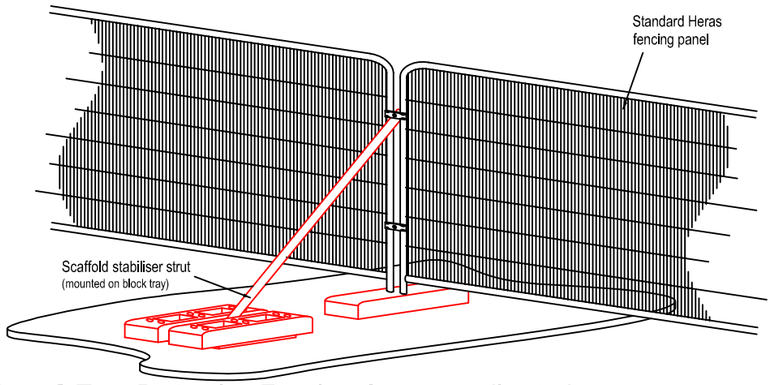

Type C Tree Protection Fencing: for use as directed
(e.g. on hard surfaces)

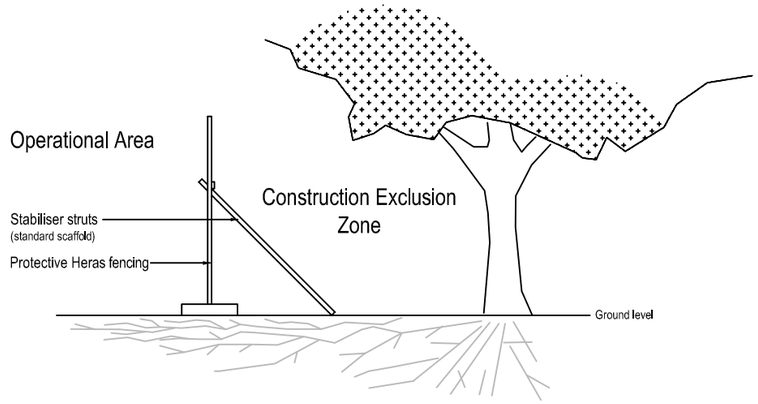

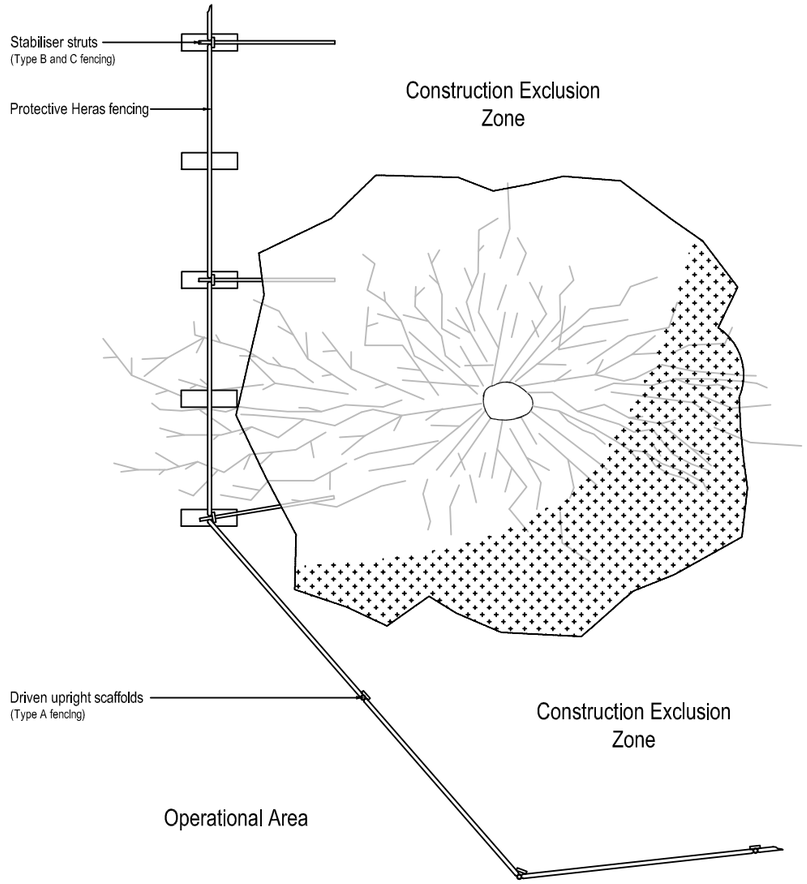

Tree Protection Notice to be attached to fencing 1.5m from the ground, facing out of the Construction Exclusion Zone and located at regular intervals along the fence line.

The notice must be at least A4 in size

Rev	Description	Drawn	Approved	Date

TEP
Genesis Centre
Birchwood Science Park Warrington
WA3 7BH
Tel 01925 844004
Fax 01925 844002
e-mail tep@tep.uk.com

Project

TEP Standard Detail

Title

Temporary Tree Protection Fencing
(Detail for tree protection around Construction Exclusion Zones)

Drwg No		
D.TREE_FENCING.001		
Scale: NTS @ A3		Date: 30/04/12
Drawn: TDP	Checked: ROS	Approved: JGS