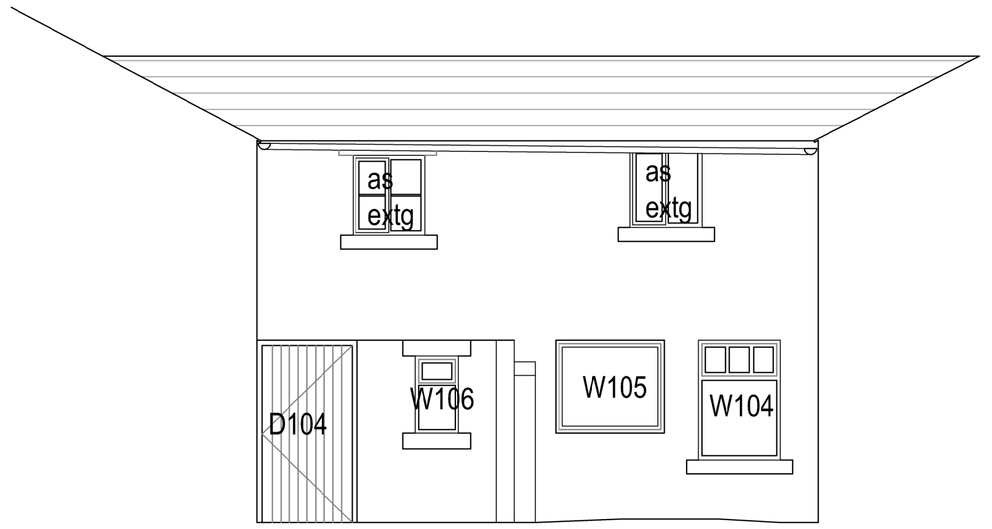
Copyright of this drawing is vested in the Architect and it must not be copied or reproduced without consent. Figured dimensions only are to be taken from this drawing. All contractors must visit the site and be responsible for taking and checking all dimensions relative to their work. Hewitt&Carr Architects Ltd are to be advised of any variation between drawings and site conditions.
CLIENTS ARE ADVISED TO CLARIFY DIMENSIONS WITH THE ARCHITECT PRIOR TO SETTING OUT AND NOT TO SCALE FROM THE DRAWING

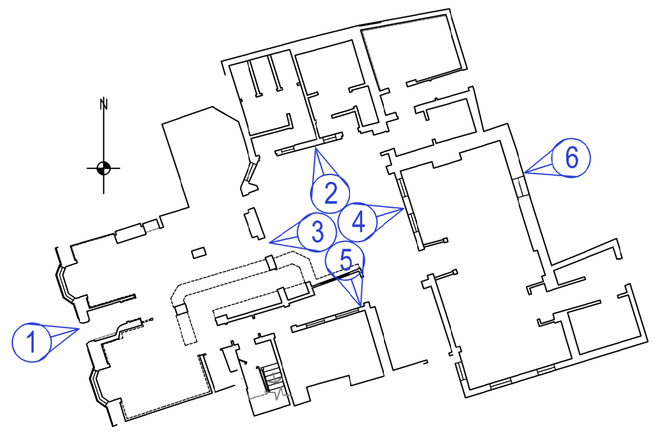
Rev.	Drawn	Comments	Date



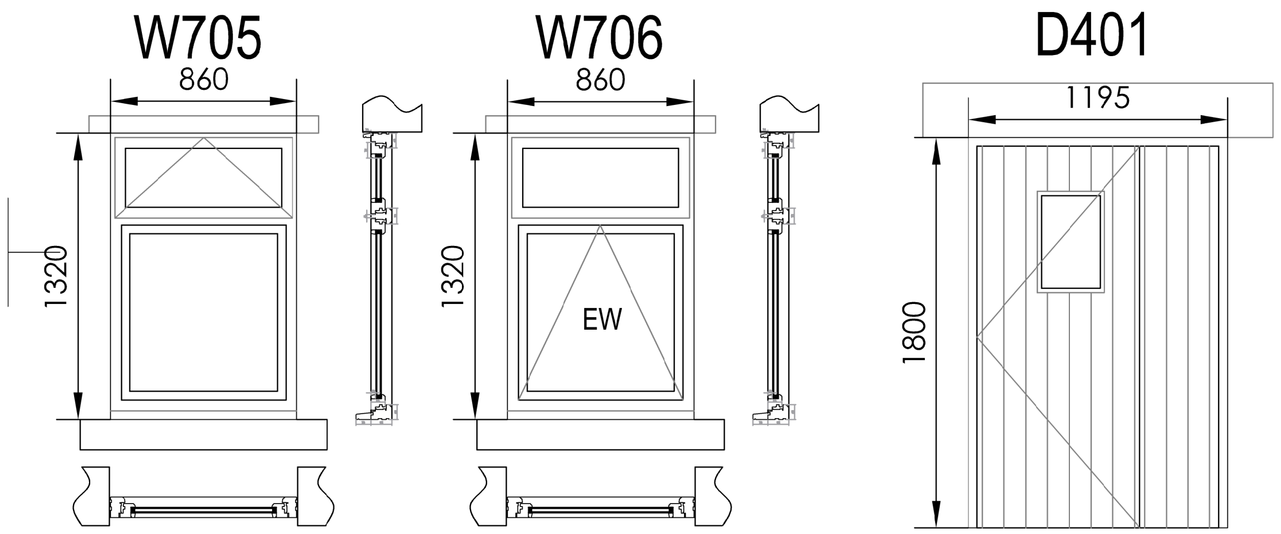
Elevation 4 1:50

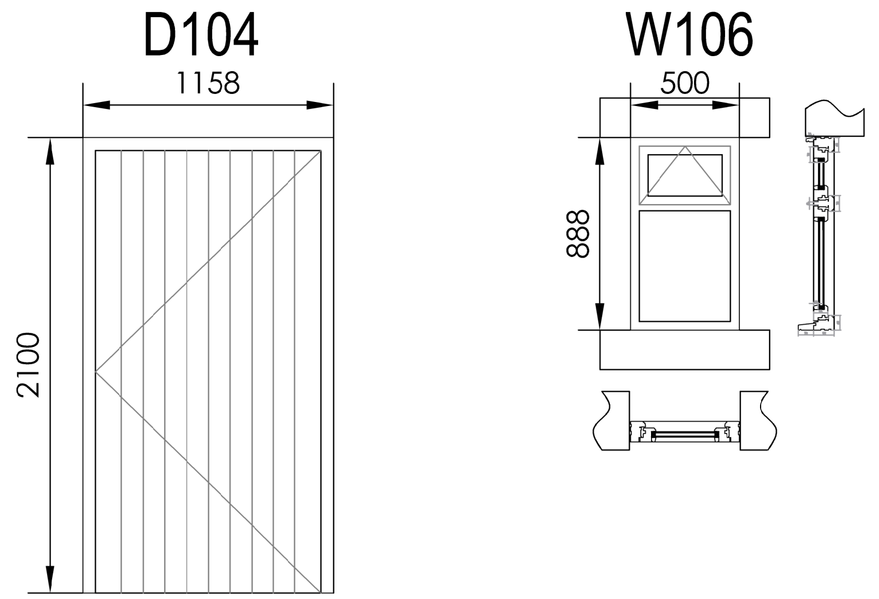


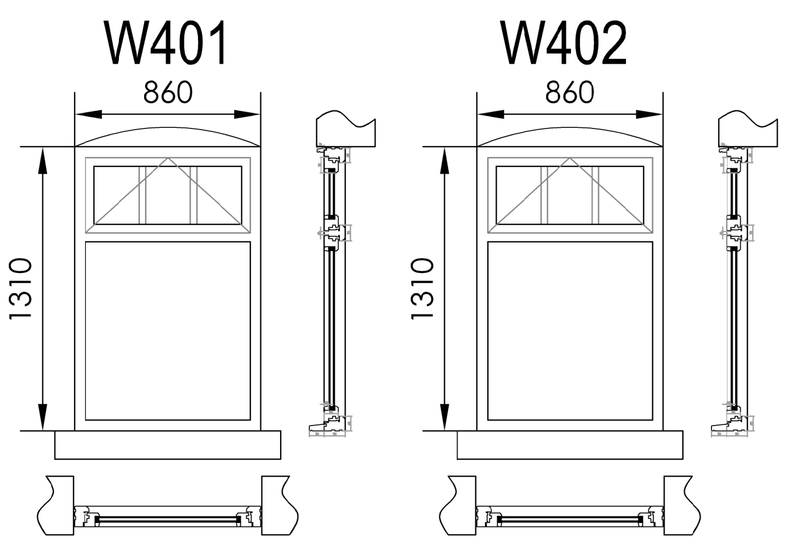
Elevation 5 1:50

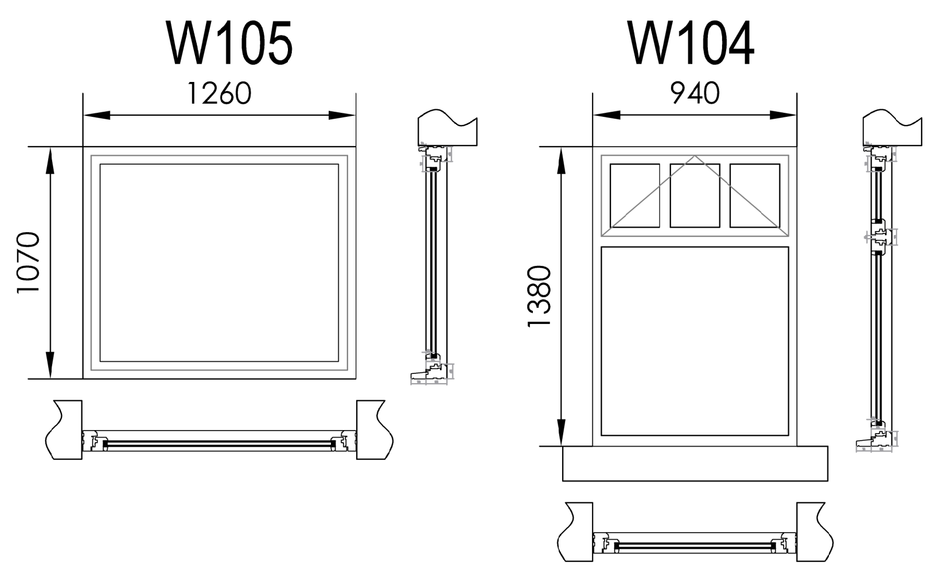


Elevation Plan 1:200









1:20
400mm 0 400mm 800mm 1200mm 1600mm 200

1:50
1m 0 1m 2m 3m 4m 5

1:200
4m 0 4m 8m 12m 16m 20

Hewitt&Carr Architects
A: DaisyBank House | 17-19 Leek Road | Cheadle | ST10 1JE
T: 01538 756888
E: enquiries@hcarchitects.co.uk
W: www.hcarchitects.co.uk

Client
Mr & Mrs S&R Ruocco

Project
Change Of Use from public house to holiday accommodation with LBC
The Quiet Woman, St Edwards St, Leek

Title
Window and Door Details

Status
Planning

Date January 2026 Drawn RA

Scale @A1 As Stated Checked

Project No Drawing No. Rev
01526 AC(0)04

PRN: RIBA 1st YEAR