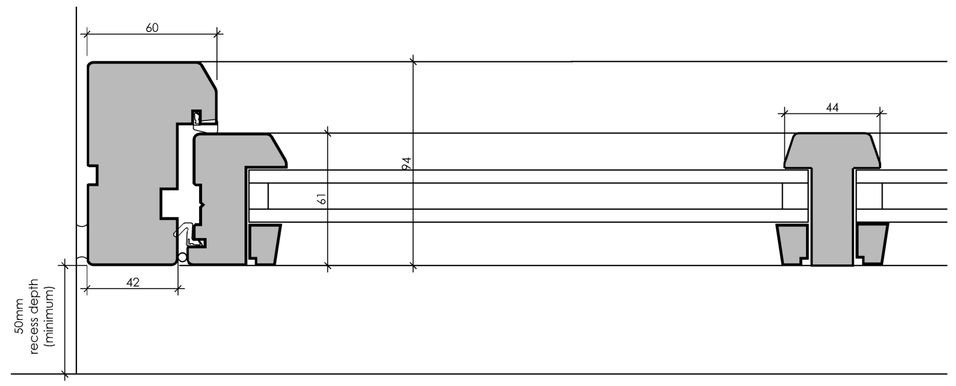
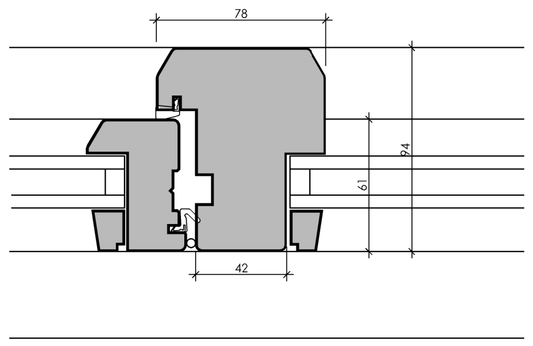
Door and window details scale 1:2

Copyright of this drawing is vested in the Architect and it must not be copied or reproduced without consent. Figured dimensions only are to be taken from this drawing. All contractors must visit the site and be responsible for taking and checking all dimensions relative to their work. Hewitt&Carr Architects Ltd are to be advised of any variation between drawings and site conditions.
CLIENTS ARE ADVISED TO CLARIFY DIMENSIONS WITH THE ARCHITECT PRIOR TO SETTING OUT AND NOT TO SCALE FROM THE DRAWING

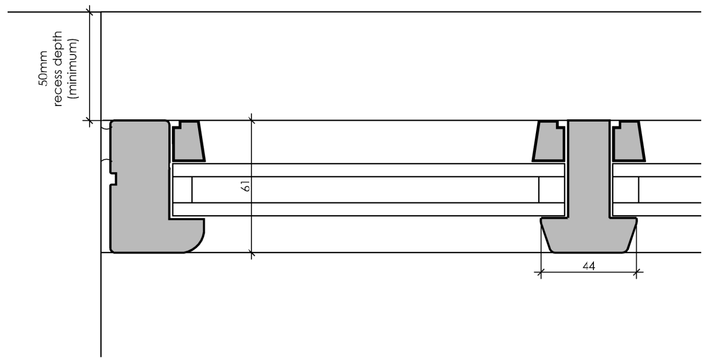
Rev.	Drawn	Comments	Date



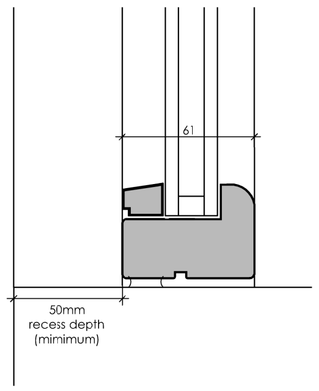
Detail 'A'



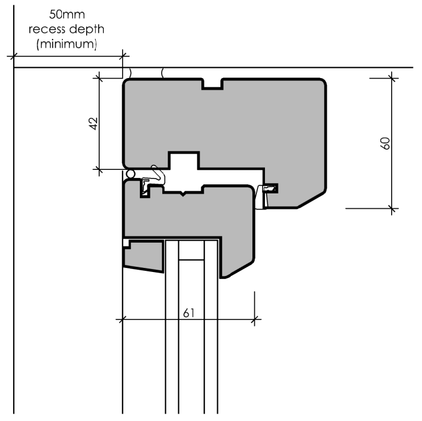
Detail 'B'



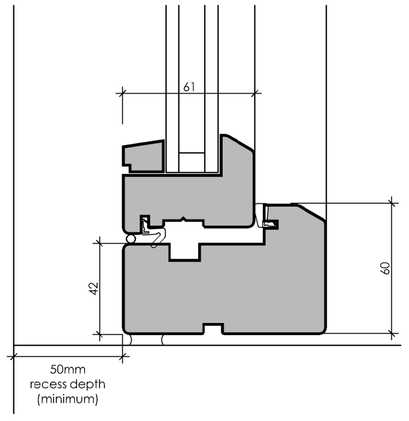
Detail 'C'



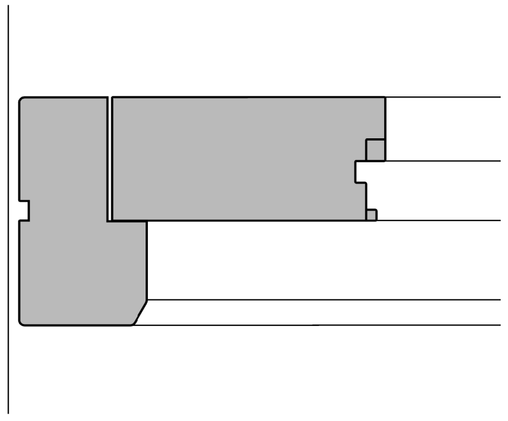
Detail 'D'



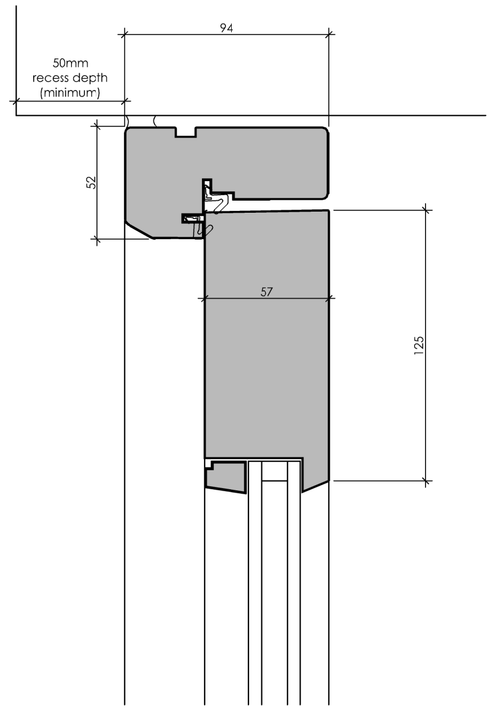
Detail 'E'



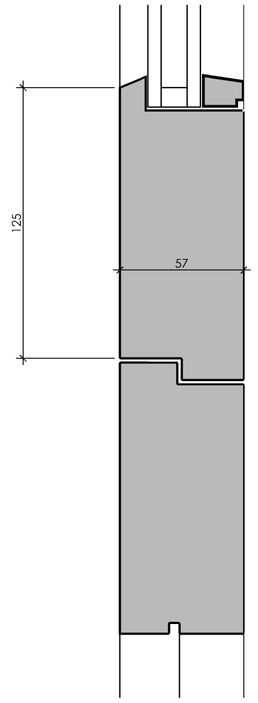
Detail 'F'



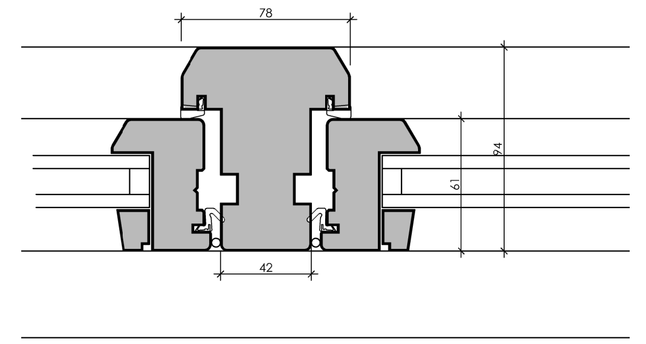
Detail 'G'



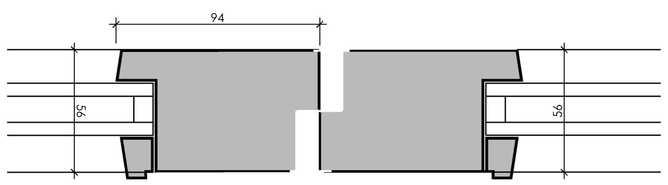
Detail 'H'



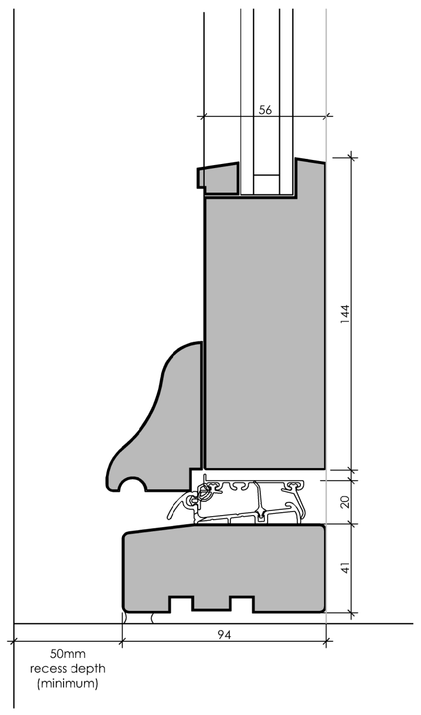
Detail 'J'



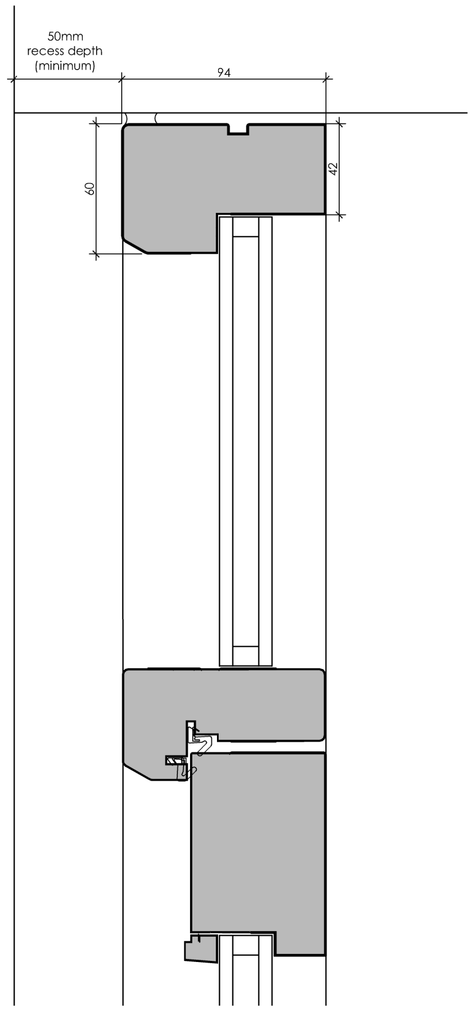
Detail 'K'



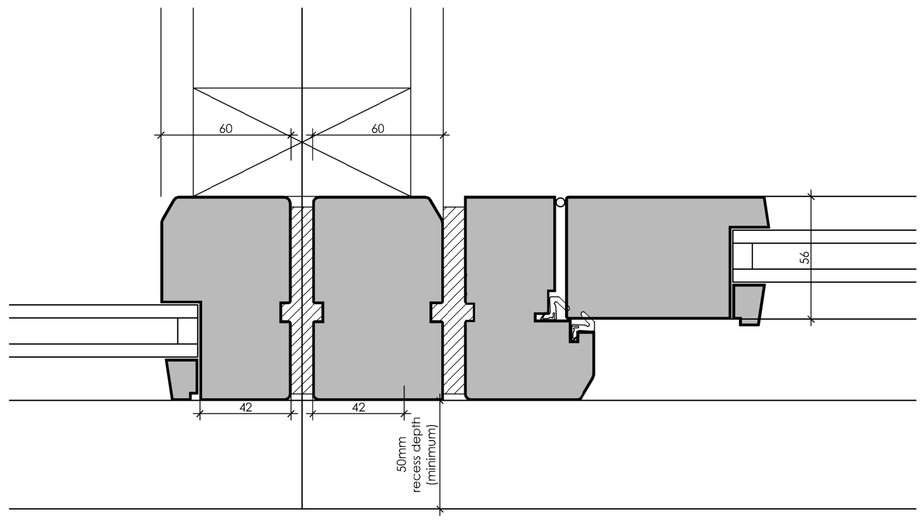
Detail 'L'



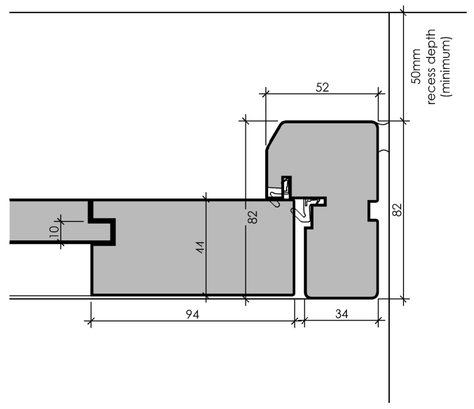
Detail 'M'



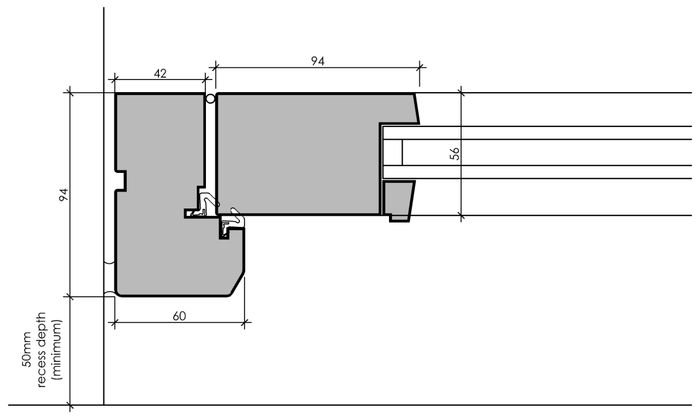
Detail 'N'



Detail 'O'



Detail 'P'



Detail 'Q'

1:2
40mm 0 40mm 80mm 120mm 160mm 200

Hewitt&Carr Architects
A: DaisyBank House I 17-19 Leek Road I Cheadle I ST10 1JE
T: 01538 756888
E: enquiries@hcarchitects.co.uk
W: www.hcarchitects.co.uk

Client
HG PA & R J Whitehurst

Project
Proposed Barn Conversion
Parkfields Farm, Cherry Lane,
Cheadle, Staffs.

Title
Joinery details

PLANNING

Status
PLANNING

Date November 2025 Drawn SV

Scale @A1 1:2 Checked

Project No 00987 Drawing No. AC(0)05 Rev

PRN: Print in: RGB