Brough Park Leisure Centre

Lighting Assessment – External Car Park

Stage 3 Proposal

BIM Yorkshire

www.bimyorkshire.com

2399-HEN-00-ZZ-RP-LTG-0001

March 2024

Amendment Sheet:

Revision	Description	Date	Author	Checked
P01	Preliminary Issue	15.03.24	SD	MSL
P02	Preliminary Issue	03.07.24	SD	MSL

Contents

1.0 INTRODUCTION 4
2.0 SITE LOCATION 4
3.0 BASIS OF THE ASSESSMENT 5
4.0 ENVIRONMENTAL ZONES 5
5.0 LUMINAIRE PROPOSALS 6
6.0 LIMITATION OF ILLUMINTATION ON SUROUNDING PREMISES 6
6.1 SOUTH CAR PARK 7
7.0 LIMITATION OF SKYGLOW 8
8.0 ECOLOGICAL APPRAISAL LIGHTING RECOMENDATIONS 9
9.0 APPENDIX A – EXTERNAL LIGHTING LAYOUT FOR PLANNING 11
(REFER TO LAYOUT - 2399-HEN-PRO-XX-00-E-6915) 11

1.0 INTRODUCTION

BIM Yorkshire Limited have been appointed by Speller Metcalfe to undertake a preliminary lighting assessment associated with the planned new extension to the existing car park, in line with Roberts Limbrick architects proposed site plan '10683-L(0)004-P09'.

The revised plan allows for 17 additional car parking spaces which includes 2 disabled bays within a designated area to the south east of the car park.

The lighting assessment aims to provide an overview of the proposed external lighting systems considered to serve the new parking areas and look at their relationship with the surrounding environment both from both a physical and ecological perspective.

2.0 SITE LOCATION

Brough Park Leisure Centre
Brough Park
Leek
ST13 6AT

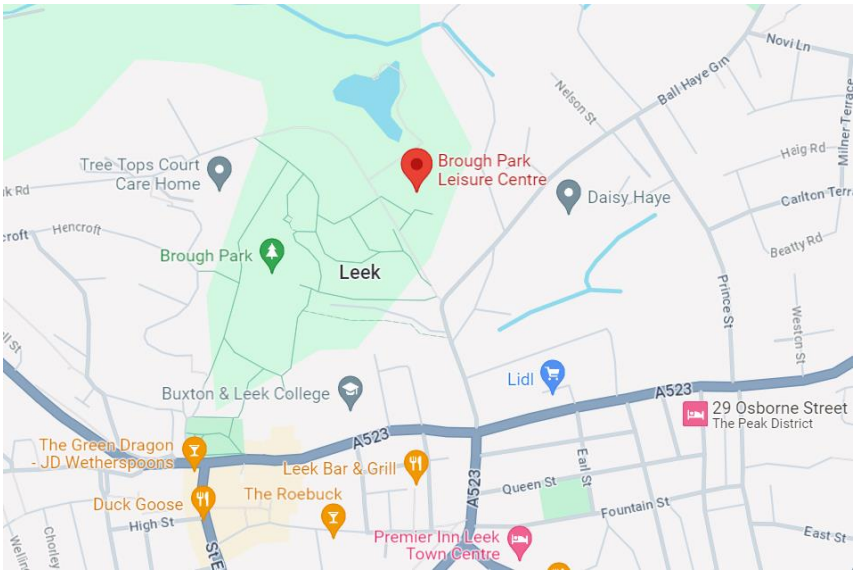

3.0 BASIS OF THE ASSESSMENT

This report has been produced in line with industry standard guidance for the reduction of obtrusive light and aims to detail through design, methods of mitigation of the effect of obtrusive light on neighbouring properties.

This report focuses on the new car park areas only and the subsequent environmental affect from obtrusive light on surrounding areas, as an impact from the proposed new lighting scheme.

This assessment provides details of the type and manufacturer of luminaries utilised within the calculation process, their location and technical information of light output and distribution.

All calculations detailed within this report have been carried out using the RELUX lighting software package.

For further information refer to 'Appendix A' of this report for details of the site and proposed external lighting layout.

4.0 ENVIRONMENTAL ZONES

For the purpose of this report the assessment has been carried out on that Brough Leisure Centre is located within 'Environmental Zone E3'.

Table 2: Environmental zones

Zone	Surrounding	Lighting environment	Examples
E0	Protected	Dark (SQM 20.5+)	Astronomical Observable dark skies, UNESCO starlight reserves, IDA dark sky places
E1	Natural	Dark (SQM 20 to 20.5)	Relatively uninhabited rural areas, National Parks, Areas of Outstanding Natural Beauty, IDA buffer zones etc.
E2	Rural	Low district brightness (SQM ~15 to 20)	Sparsely inhabited rural areas, village or relatively dark outer suburban locations
E3	Suburban	Medium district brightness	Well inhabited rural and urban settlements, small town centres of suburban locations
E4	Urban	High district brightness	Town / City centres with high levels of night-time activity

5.0 LUMINAIRE PROPOSALS

The lighting design has been progressed based upon the Holophane 'S-line' range of post top mounted luminaires. Each light will be mounted on a 5m column. This is in keeping with the existing lighting installation that is understood to be adopted by the local authority.

S-Line Image

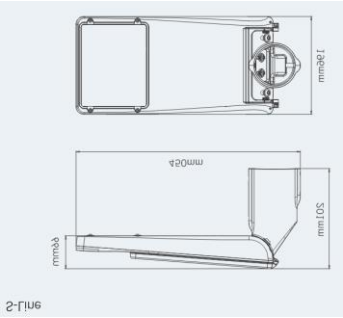

S-Line Dimensions

All post top luminaires have been selected with an output colour temperature of 3000kelvin so as to ensure IDA dark sky certification.

6.0 LIMITATION OF ILLUMINTATION ON SUROUNDING PREMISES

The below table details the recommended maximum values of vertical illuminance on nearby dwellings and premises.

Light technical parameter	Application conditions	Environmental zone				
		E0	E1	E2	E3	E4
Illuminance in the vertical plane (E_v)	Pre-curfew	n/a	2 lx	5 lx	10 lx	25 lx
	Post-curfew	n/a	<0.1 lx*	1 lx	2 lx	5 lx

As Brough Leisure Centre has been designated as 'Environmental Zone E3' the maximum values of illuminance permitted are **10lux** pre-curfew & **2lux** post curfew.

6.1 SOUTH CAR PARK

Our first study concentrates on the south car park area. The below image details the 3D luminance distribution for the proposed south car park, including the additional spaces designated 19 to 22 and 23 to 27.

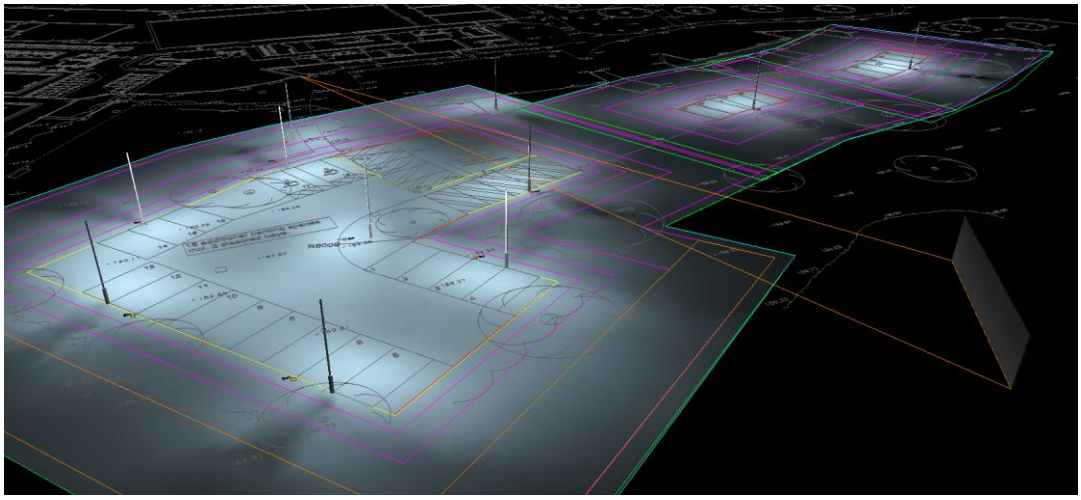

The rectangular detail to the right-hand side of the image represents the north west elevation of the local premises, Moorland Veterinary Centre.

We have modelled both the north-west and north-east elevations of the veterinary centre to assess the impact of vertical illumination, in line with the maximum permitted values.

North East Elevation Illuminance Results:-

Illuminance [lx]

Average illuminance	$\bar{E}_m$	: 0.03 lx
Minimum illuminance	E_{min}	: 0.02 lx
Maximum illuminance	E_{max}	: 0.06 lx
Uniformity U_o	$E_{min}/\bar{E}_m$	: 1 : 1.93 (0.52)

North West Elevation Illuminance Results:-

Illuminance [lx]

Average illuminance	$\bar{E}_m$	: 0.18 lx
Minimum illuminance	E_{min}	: 0.1 lx
Maximum illuminance	E_{max}	: 0.33 lx
Uniformity U_o	$E_{min}/\bar{E}_m$	: 1 : 1.82 (0.55)

As can been seen above, calculations show we are well below the pre-curfew '10lux' maximum values & post-curfew '2lux' value, therefore the current design will **PASS.**

(Note – lighting will be complete with integral PIR sensors & controlled via a central time clock, set to switch off at curfew hours (typically 23:00-07:00), therefore the maximum permitted pre-curfew 10lux value would be relevant).

7.0 LIMITATION OF SKYGLOW

The below table details the recommended maximum values of upward light ratio (ULR) of luminaires.

Light technical parameter	Environmental zones				
	E0	E1	E2	E3	E4
Upward light ratio (ULR) / %	0	0	2.5	5	15

The Holophane S-Line luminaires are direct downward facing post-top fittings, therefore 0% upward light is produced, as detailed by the below light distribution chart:-

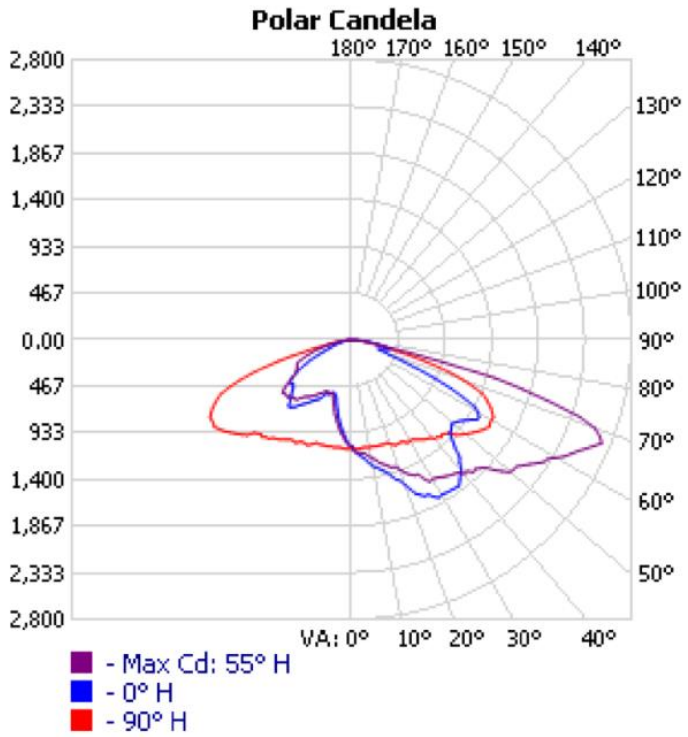

As we are well below the 'environmental zone E3' 5% maximum value, the current luminaire selection will **PASS.**

8.0 ECOLOGICAL APPRAISAL LIGHTING RECOMENDATIONS

Arbtech have carried out an ecological appraisal of site, which has recommend a low-impact lighting strategy be adopted. Below we list their recommendations and our design methods to mitigate potential issues:-

- *Light spill on to any trees should be avoided.*

The Holophane S-Line luminaires can be selected with 'backlight shields' similar to the type detailed below

Example backlight shield

- *Use narrow spectrum light sources to lower the range of species affected by lighting.*

The design has utilised the Holophane S-Line R3 luminaire that has a concentrated beam angle to light both the parking area and adjacent paths only.

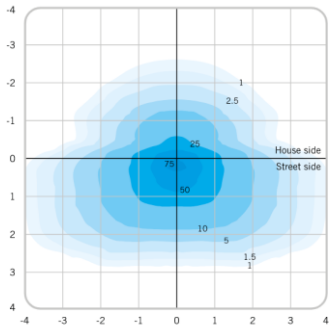

R3 (Type III Short)

- *Use light sources that emit minimal ultra-violet light.*

Lighting will selected with a 3000K colour temperature

- *Avoid white and blue wavelengths of the light spectrum to reduce insect attraction and where white light sources are required in order to manage the blue shortwave length content they should be of a warm / neutral colour temperature <4,200 kelvin.*

Lighting will selected with a 3000K colour temperature.

- *Not use bare bulbs and any light pointing upwards. The spread of light will be kept in line with or below the horizontal cowls, louvers and shields. Lights will also be directional to ensure that light is directed to the intended areas only.*

Lighting will produce directional downlight only. Where necessary backlight shields shall be utilized to limit glare / spread of light.

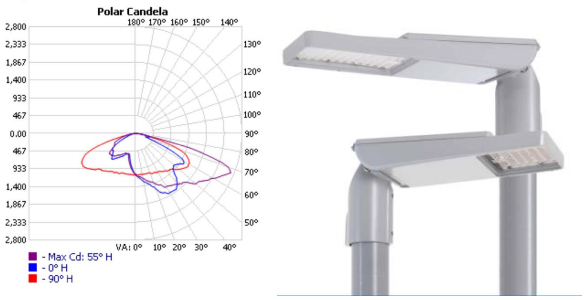

- *External lighting will be on PIR sensors that are sensitive to large objects only (so that they are not triggered by passing bats) and will be set to the shortest time duration to reduce the amount of time the lights are on.*

Noted, all column mounted luminaires will be complete with intelligent integral daylight sensors, controlled centrally via a digital time clock set to switch off during curfew hours.

- *Wall lights and security lights will be 'dimmable' and set to the lowest light intensity settings. There are several products on the market that allow the control of the light intensity and the duration that the lights are on. All lighting on the developed site will make use of the most up to date technology available.*

All building mounted luminaires will be LED technology low glare controlled via a central lighting control, deigned to achieve the minimum required lux levels for their particular task.

9.0 APPENDIX A – EXTERNAL LIGHTING LAYOUT FOR PLANNING

(REFER TO LAYOUT - 2399-HEN-PRO-XX-00-E-6915)