0 0.5 1.0 1.5 2.0 2.5m
Scale 1:50

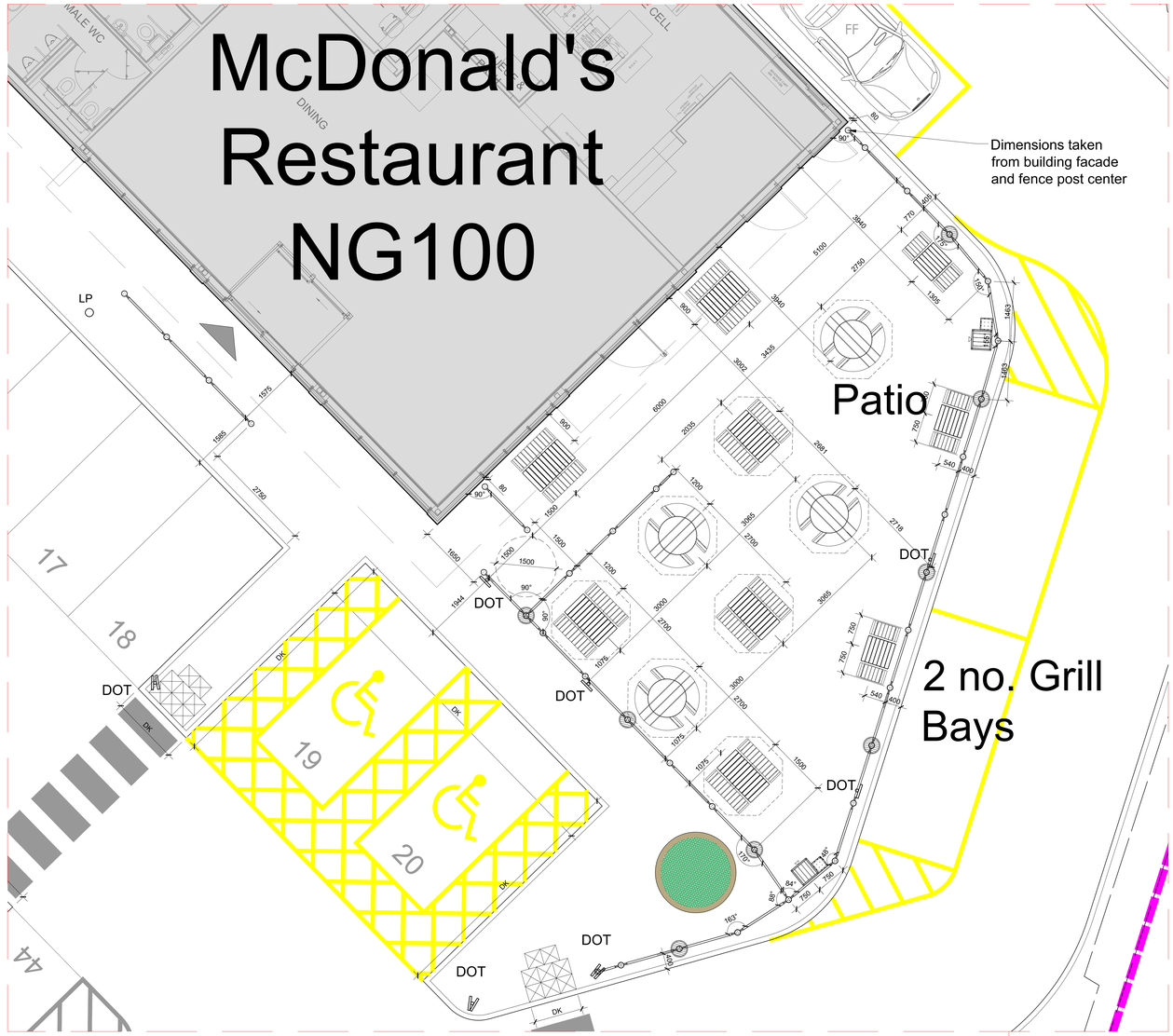

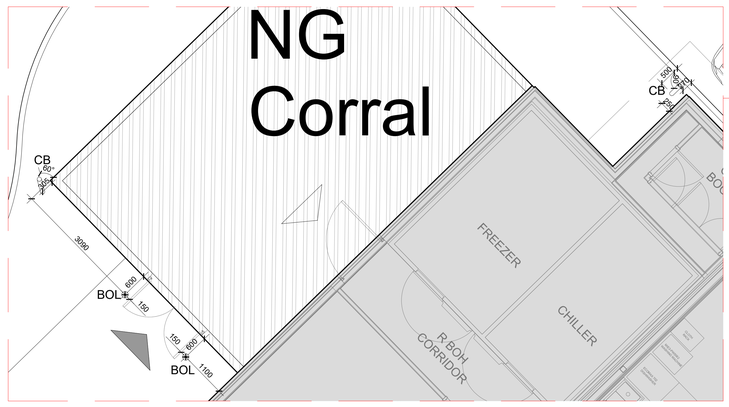

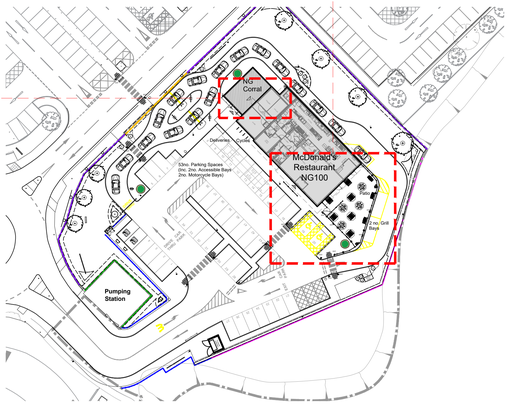

Key Reference Plan
Scale 1:500

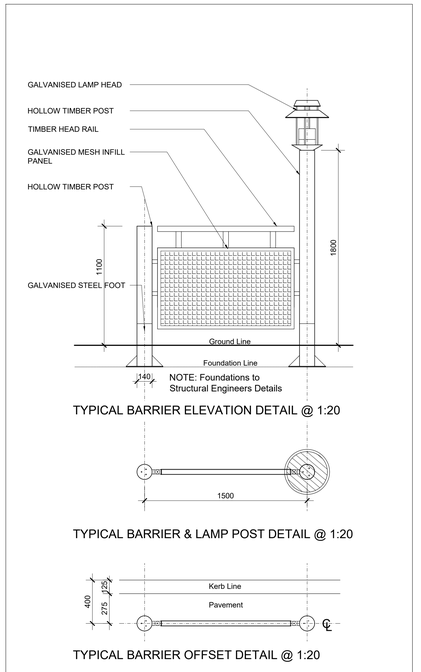

NOTES

- All dimensions and levels are to be checked on site.
- Any discrepancies are to be reported to the architect before any work commences.
- This drawing shall not be scaled to ascertain any dimensions. Work to figured dims only.
- This drawing shall not be reproduced without express written permission from AEW.
- Title overlay drawings and ownership boundaries are produced using all reasonable endeavours. AEW cannot be responsible for the accuracy or scale discrepancy of base plans supplied to them.
- All works are to be undertaken in accordance with Building Regulations and the latest British Standards.
- All proprietary materials and products are to be used strictly in accordance with the manufacturers recommendations.

CDM 2015

Client notified of duties: **At Design Workshops**

Principal Designer: **CSS**

Unless noted below, all known hazards have been highlighted on the drawing:

Drawing Based on:

- Hadfield Cawkwell Davidson Architects drawing A-SK-011_Proposed Site Plan Option 2 dated 25/11/20.
- LEEK Sainsbury's - ProMap
- Glanville Site Survey Sheet 2 REF: 4210369/4102 Dated Oct 2021
- Vector Design Concepts: 18222-VL-McD_L01 Dated Feb 2022
- Signify Lighting Plot: O-164008 Dated March 2022
- Extent of McDonald's Demise Indicated:

Notes:
All drawings to be read in conjunction with all other drawings as noted on issue sheet.

Patio Aubrilam Furniture Schedule	
Circular Table - 4 Seat 1600mm Ø (H 750mm). Galvanised steel frame with laminated timber effect finish	
Rectangular Table - 6 Seat 650mm x 2670mm (H 750mm). Galvanised steel frame with laminated timber effect finish	
Rectangular Table - 4 Seat 1250mm x 1400mm (H 750mm). Galvanised steel frame with laminated timber effect finish	
Rectangular Table - 2 Seat 750mm x 1400mm (H 750mm). Galvanised steel frame with laminated timber effect finish	
Trash Bin 492 x 492mm (H 1217mm). Galvanised steel frame with laminated timber effect finish	
Ash Bin 297 x 297mm (H 891mm). Galvanised steel frame with laminated timber effect finish	
Umbrella 2.1 m Octagonal Parasols (black canopy with white McDonald's text)	

REV	Date	Drawn by: -	Checked by: -
B	18/09/2023	LMD	JJS
Playplace removed & replaced with 4no. seats			
A	31/03/2023	JJ	JJS
Retaining wall and shelter removed. Cidneo barrier shown.			
-	24/02/2023	LMD	EOH
Initial Issue			

Status: Purpose of Issue: **For Information**

drawing stage: **Construction**

client: **McDonald's Restaurants Ltd**

project: **Leek Churnet Close**

store: **1716**

drawing title: **Detail Patio Layout**

date: **24/02/2023** drawn: **LMD**
scale@A0: **1:50** checked: **EOH**

CONSTRUCTION

Job No: **12385_AEW_1716_0010**

Rev: **B**

aew architects
0161 214 4370
www.aewarchitects.com

Detail Patio Layout