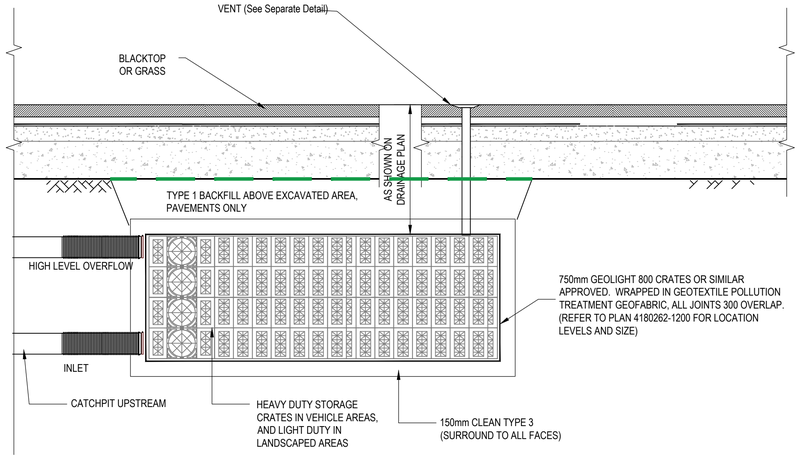

TYPICAL SECTION THROUGH STORAGE CELL SOAKAWAY (REFER TO PLAN)

Scale 1:20

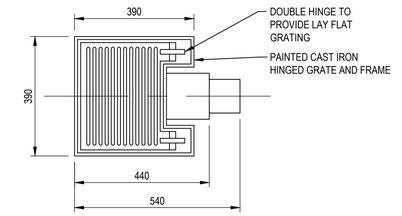

PLAN

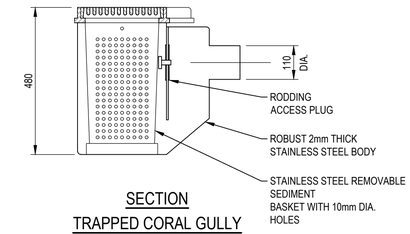

SECTION

TRAPPED CORAL GULLY

Scale 1:10

(PARAGON STAINLESS UK LTD: REFERENCE:- TYPE-54730)

NOTES:

1. THIS DRAWING MUST BE READ IN CONJUNCTION WITH ALL RELEVANT ENGINEERS DRAWINGS. ANY DISCREPANCIES FOUND BETWEEN INFORMATION SHOWN ON THIS OR ANY OTHER DRAWING SHALL BE REPORTED TO THE ENGINEER IMMEDIATELY AND PRIOR TO WORKS COMMENCING ON SITE.
2. WHERE DRAWING TO SCALE, SCALING PERMITTED FOR PLANNING PUPOSES ONLY.
3. INVERT LEVELS OF EXISTING DRAINAGE & CONNECTIONS SHALL BE VERIFIED PRIOR TO ANY WORKS COMMENCING ON SITE. ANY DISCREPENCY SHALL BE REPORTED TO DRAINAGE ENGINEER IMMEDIATELY.
4. INVERT LEVELS GIVEN AT MANHOLES ON DRAWING ARE THAT OF THE LARGEST DIAMETER PIPE UNLESS OTHERWISE STATED.
5. ABOVE GROUND DRAINAGE DETAILS AND ROUTES ARE TO BE FINALISED BY OTHERS.
6. BEDDING DEPTHS APPLY TO FINISHED ROAD DEPTHS. CONTRACTOR TO PROVIDE ADEQUATE PROTECTION TO PIPES IF LOADED PRIOR TO FINISHING ROAD LAYERWORKS OR FIELD TOPSOIL.
7. ALL PRIVATE DRAINAGE WORKS SHALL BE IN ACCORDANCE WITH PART H BUILDING REGULATIONS AND OSMA DRAIN INSTALLATION SPECIFICATIONS.
8. ALL EXTERNAL DRAINAGE WORKS SHALL BE OSMA ULTRA RIB PIPEWORK, SPIGOT AND SOCKET WITH CONCRETE BED AND SURROUND IF COVER TO SOFFIT IS LESS THAN 900 IN ROADS AND 600 IN FIELDS.
9. RWP OUTLETS 100mm DIAMETER UNLESS OTHERWISE STATED ON DRAINAGE LAYOUT.
10. MINIMUM FOUL WATER DRAINAGE SHALL BE 110mm DIAMETER UNLESS OTHERWISE STATED.ALL FOUL SEWERS 150mm DIAMETER
11. ALL PIPEWORK SHALL JOIN AT SOFFIT LEVEL UNLESS OTHERWISE STATED ON DRAINAGE LAYOUT.
12. ALL CONCRETE WORK TO BE IN ACCORDANCE WITH BS 8110. CONCRETE TO MEET CLASS DS-1, ACEC CLASSIFICATION AC-1S AND ACHIEVE 100 YEAR EXPOSURE CLASS XS2. DETAILS OF CONCRETE SPECIFICATION ARE TO BE SUBMITTED AND APPROVED BY THE ENGINEER.
13. ALL GULLIES ARE TO BE TRAPPED AND TO BS. 5911. GRATINGS AND FRAMES ARE TO BE TO BS EN 124. GULLY CONNECTIONS ARE TO BE 150mm DIAMETER AND SHALL BE LAID IN TYPE Z BEDDING WHERE UNDER PROPOSED CARRIAGEWAY.
14. IT IS THE CONTRACTORS RESPONSIBILITY TO ENSURE THAT ALL SERVICES THAT ARE AFFECTED BY THE PROPOSED WORKS ARE LOCATED PRIOR TO WORKS COMMENCING. TRIAL HOLES ARE TO BE DUG IF NECESSARY.
15. ALL ACCESS CHAMBERS AND MANHOLES LESS THAN 1200mm IN DIAMETER AND DEEPER THAN 1.2m SHALL USE A 350mm ACCESS RESTRICTOR OR RESTRICTED ACCESS COVER.
16. ALL FOUL PPIC INLETS THAT ARE NOT USED TO HAVE BLANKING PLATE INSTALLED.

Load Class		Refer to Layout Drawings
Minimum Dimensions (mm)	X	150
	Y	Full Channel Height (Less Y2 where applicable)
	Z	150
Maximum Dimensions (mm)	Y2	35
	Y3	60

* e.g. PARKING AREAS FOR ALL TYPES OF ROAD VEHICLE. NOT SUITABLE FOR CARRIAGEWAY OF ROADS OR INDUSTRIAL AREAS.

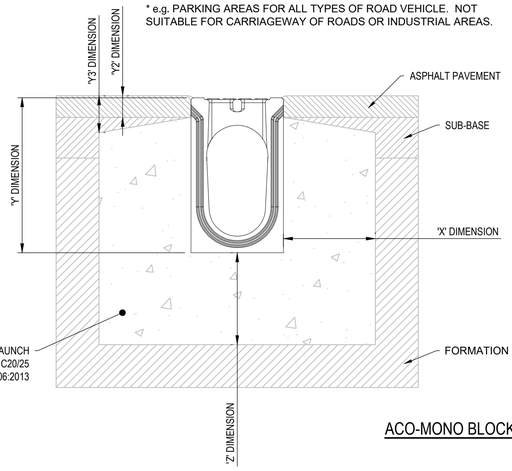



ISOMETRIC VIEW
SCALES 1:10

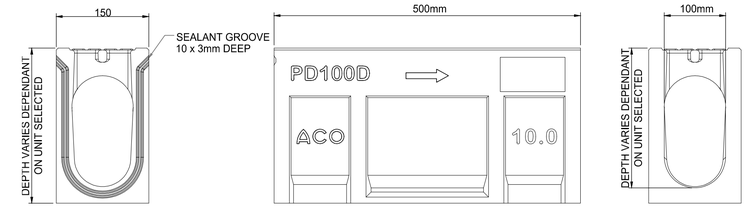

ACO-MONO BLOCK DRAINAGE CHANNEL DETAIL

N.T.S.

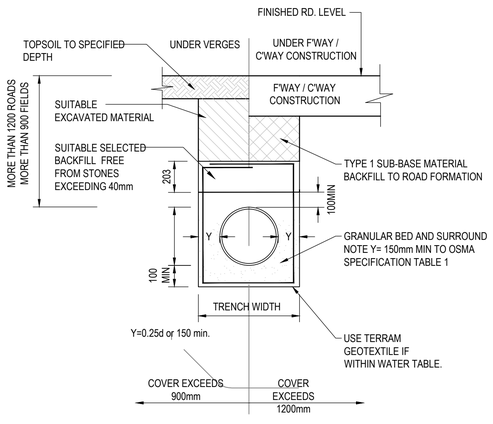

TRENCH TYPE - CLASS S GRANULAR

Scale 1:20

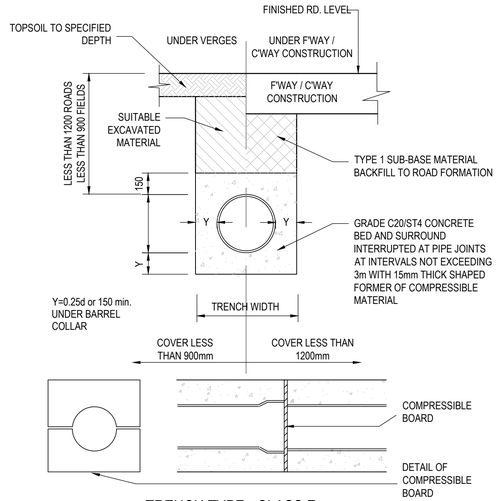

TRENCH TYPE - CLASS Z

Scale 1:20

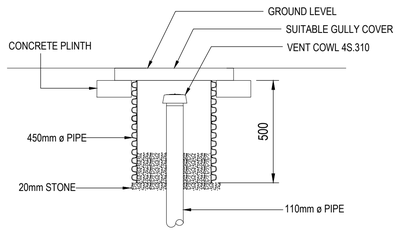

TYPICAL VENT DETAIL

Scale 1:20

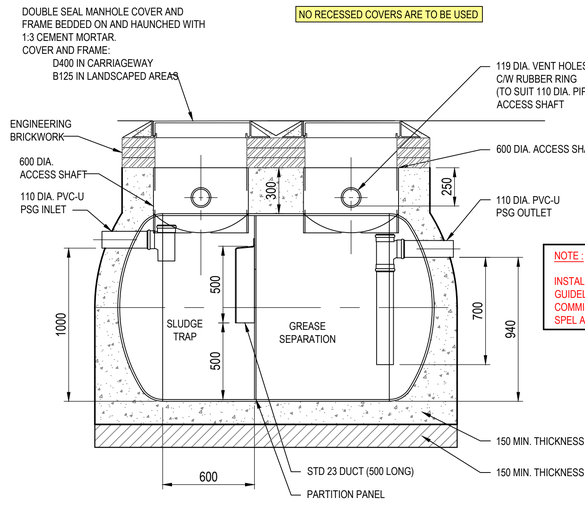

SECTION

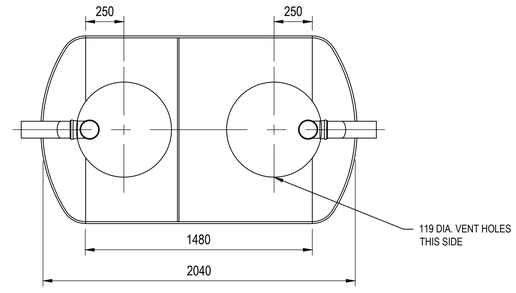

PLAN

2000L SPEL GREASE INTERCEPTOR WITH TELEMETRY ALARM

SCALE 1:20

McDonald's ™

FOR TENDER

Rev.	Description	Date	Chkd
T2	NOTE 2 UPDATED TO PERMIT SCALING FOR PLANNING PURPOSES	20/07/23 WJB	HBG
T1	TENDER ISSUE	17/02/23 WJB	HBG

Glanville
3 Grovelands Business Centre
Boundary Way
Hemel Hempstead, Herts. HP2 7TE
Tel: (01442) 835999 Fax: (01442) 258924
postbox@glanvillegroup.com
www.glanvillegroup.com

Client : McDonald's RESTAURANT

Project : McDONALD'S RESTAURANT
LEEK, CHURNET CLOSE
(ST1716)

Title : DRAINAGE DETAILS
SHEET 1 OF 3

Project Engineer :	HBG	Scale :	AS SHOWN
Project Director :	HBG	Date :	JAN 2023
Status :	TENDER		

Drawing No. 4210369-1201 Rev T2