NOTES:

- Mortar Joints Pointed And Struck (Mortar To Be 2:1 Granite Dust: Cement)
- Laying Course Of Sand. Course Sand Tp Nd 6717 Part 1, 50mm Thick, Kiln Dried

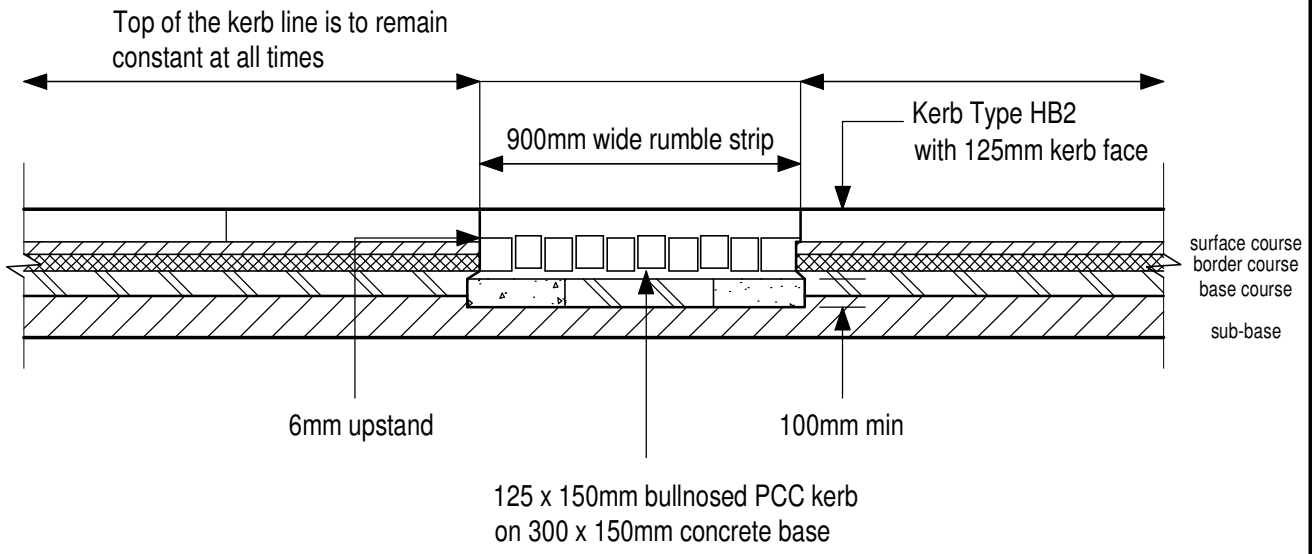

Penlee Ltd

Proposed Housing Development
Ivy Cottage, Tythe Barn,
Alton,
Stoke-on-Trent,
ST10 4AZ

Planning Conditions
Rumble Strip Detail

Date	Sheet	Scale
June 2023	A4	-
Drg No.	Rev.	Drawn
2014-1983-43	-	NAW

A -

SAMMONS Architectural LIMITED
Chartered Institute of Architectural Technologists Registered Practice
10 Cawdry Buildings, Fountain Street, Leek. ST13 6JP
Telephone: 01538 386002
E-mail: info@sammonsltd.co.uk
Web: www.sammonsltd.co.uk

This drawing is copyright.
All dimensions must be checked prior to commencement.