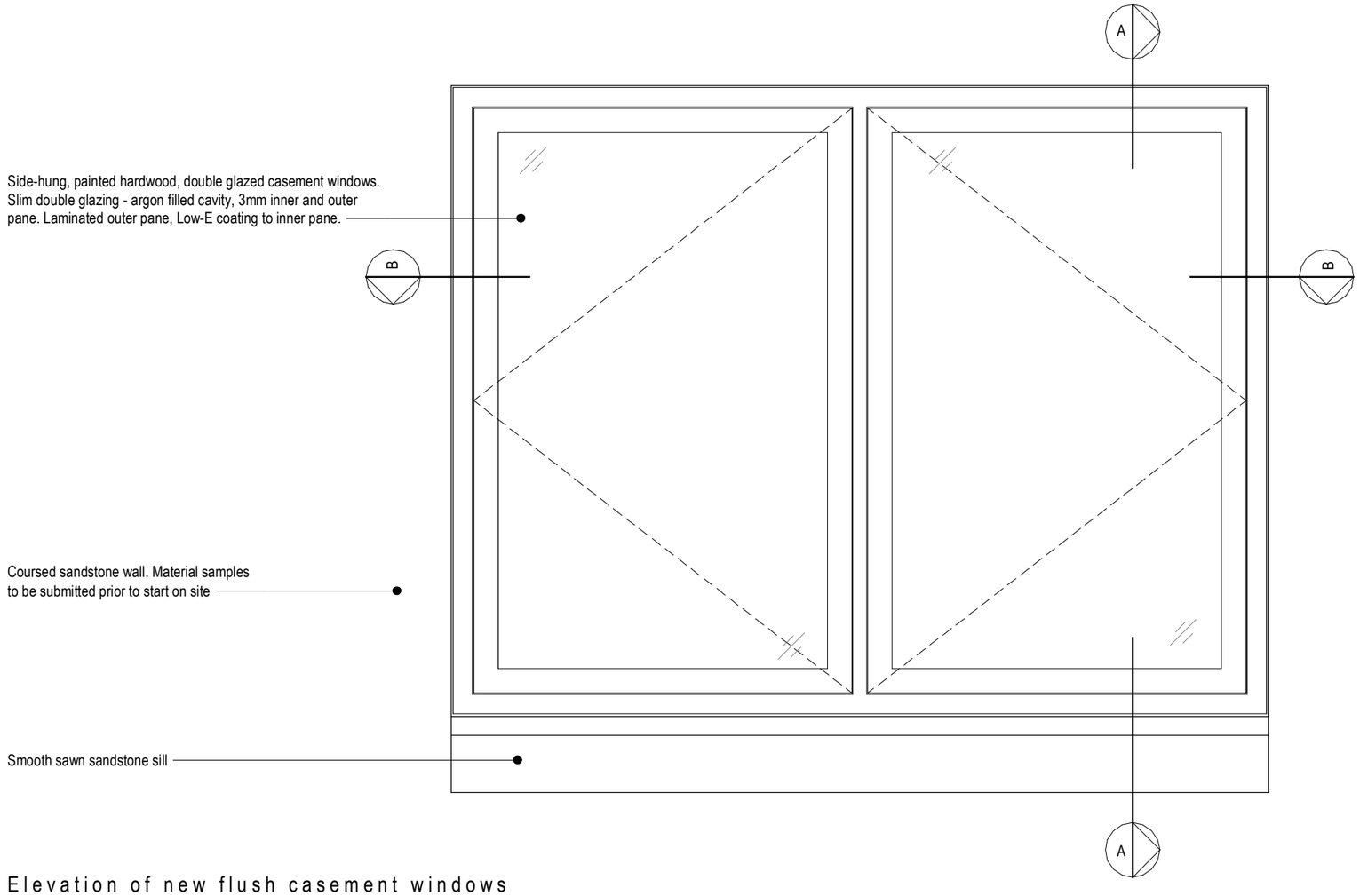

Elevation of new flush casement windows
(W.0.10, W.0.11, W.012)

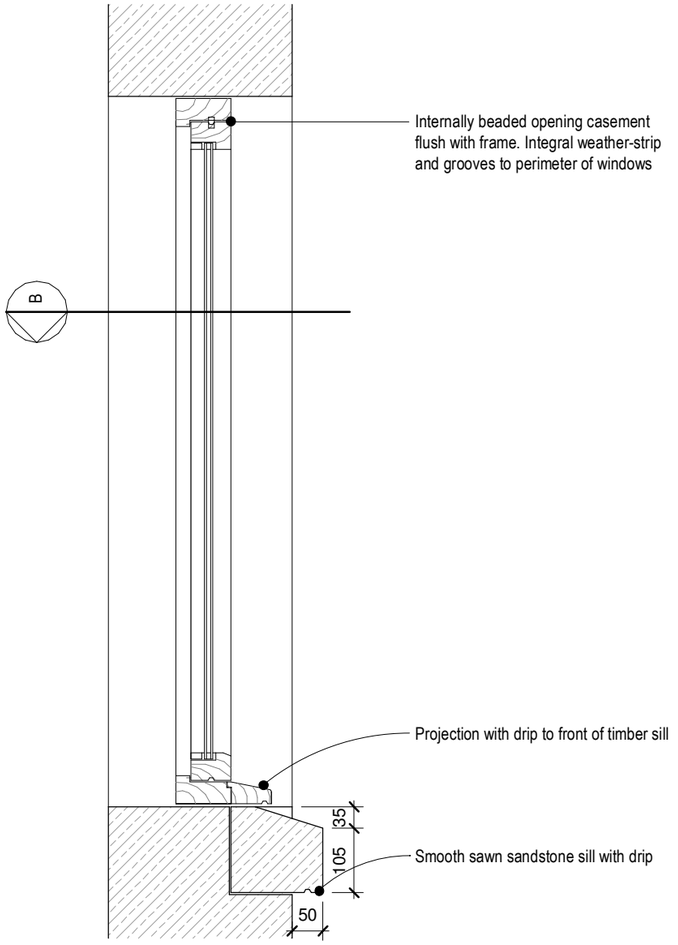

Section A-A
(W.0.10, W.0.11, W.0.12)

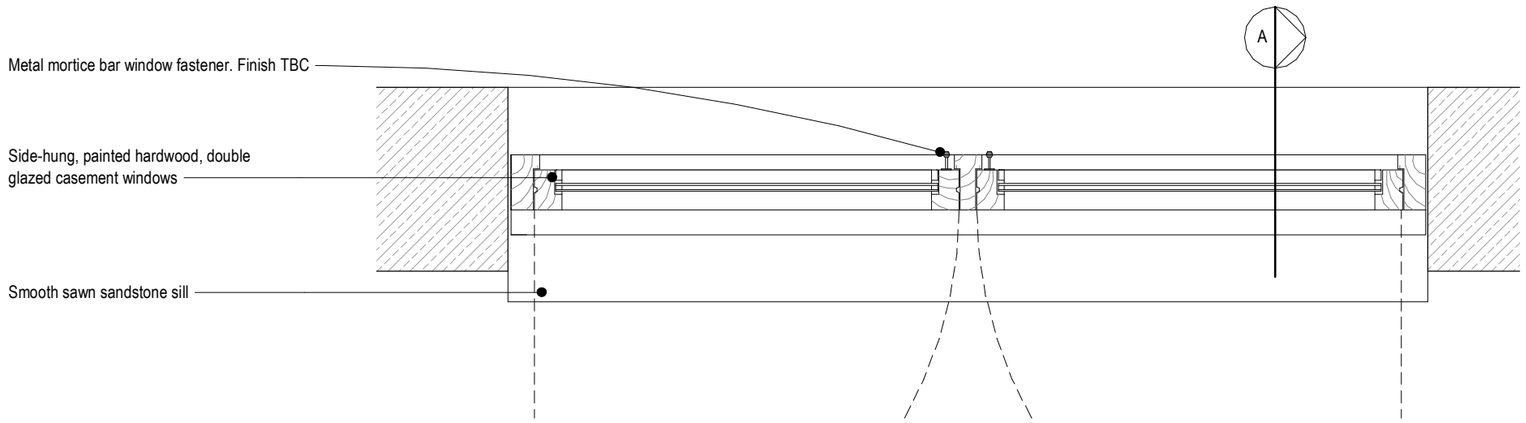

Section B-B
(W.0.10, W.0.11, W.012)

Rev	Date	Drawn	Description

ctd architects
Clerk Bank House
Clerk Bank
LEEK
Staffordshire
ST13 5HE
t : 01538 373477
f : 01538 386503
e : info@ctdarchitects.co.uk
w : www.ctdarchitects.co.uk

ctd architects © 2023
- This drawing is copyright.
- All dimensions to be checked on site before proceeding.
- Contractor must notify the architect of any discrepancies before proceeding.
- Contractor to check/adjust dimensions of new work to suit existing conditions. Do not assume existing structure or details are plumb, square or level.
- All drawings to be read in conjunction with all other consultants drawings and specs.

Client
Emma Nowill

Project
Proposed alterations & rear / side extension
62 Brookfields Rd, Ipstones, Stoke-on-Trent ST10 2LY

Title
Proposed typical casement window details (W.0.10, W.0.11, W.0.12)

Scale	Size	Drawn	Chk'd	Date
1 : 10	A3	KJH	CH	04/01/23

Status: CONDITION DISCHARGE

Job No.	Drawing No	Rev.
2149	AL030	