Existing Church Building

Proposed Redevelopment Area

Changes to church building approved
REF : SMD/2016/0641

New Single Entrance

Seating Area

Toilet

New Entrance Lobby

up

Extg. staircase retained to access first floor

Wheelchair Lift

Coffee Bar

Store

Worship Area

Access driveway

Reform this area to provide adequate male, female and disabled toilet accommodation. Final layout to be agreed.

Toilet (Male)

Toilet Female)

Toilet

Toilet

Lobby

Build up extg. door opening.

Form new door opening.

glazed link

Kitchen

Function Room
116m2 (1248 sq. ft.)

Service yard

Store

New single storey link extension

Boiler / Cleaner

Church Office
Existing building refurbished to form office

Charles Street

Memorial Garden & Community Allotment

Car Parking

Access driveway

Pedestrian access to gated Memorial Garden and Community Allotment

Allotment Gardens

Proposed plan layout scale 1: 100 at A1

N

E

S

W

1:100
2m 0 2m 4m 6m 8m 10m

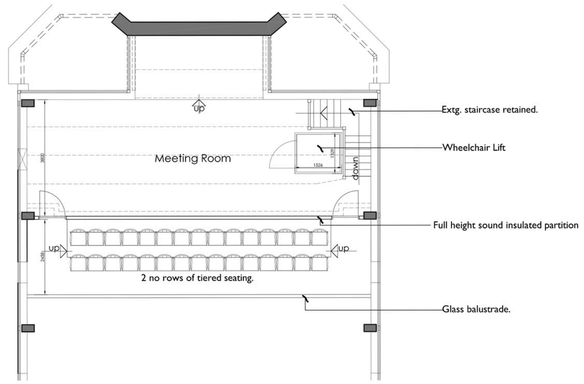

First floor plan scale 1: 100 at A1

Ordnance Survey © Crown copyright 2022 All rights reserved.
Licence number 100051789



Site Location Plan 1:1250

1:1250
25m 0 25m 50m 75m 100m 125m

Copyright of this drawing is vested in the Architect and it must not be copied or reproduced without consent. Figured dimensions only are to be taken from this drawing. All contractors must visit the site and be responsible for taking and checking all dimensions relative to their work. Hewitt&Carr Architects Ltd are to be advised of any variation between drawings and site conditions.
CLIENTS ARE ADVISED TO CLARIFY DIMENSIONS WITH THE ARCHITECT PRIOR TO SETTING OUT AND NOT TO SCALE FROM THE DRAWING

Rev.	Drawn	Comments	Date
A	SM/ANK	Changes to layout	2/9/2022
B	ANK	Location plan added	14/11/2022
C	ANK	Note amended	25/01/2022

SCHEME DRAWING

Hewitt&Carr Architects
A: 2-4 Cross Street I Cheadle I Staffordshire I ST10 1NP
T: 01538 756888
E: enquiries@hcarchitects.co.uk
W: www.hcarchitects.co.uk

Client
Cheadle Methodist Church.

Project
Proposed redevelopment of church hall at Charles Street, Cheadle, Staffordshire.

Title
Floor plans/Site layout and site location plan as proposed

Status
PLANNING

Date August 2022 Drawn SM

Scale @A1 As noted Checked

Project No 01136 Drawing No. AL(0)05 Rev C

File Ref: H:\REF