FRONT ELEVATION 1:100

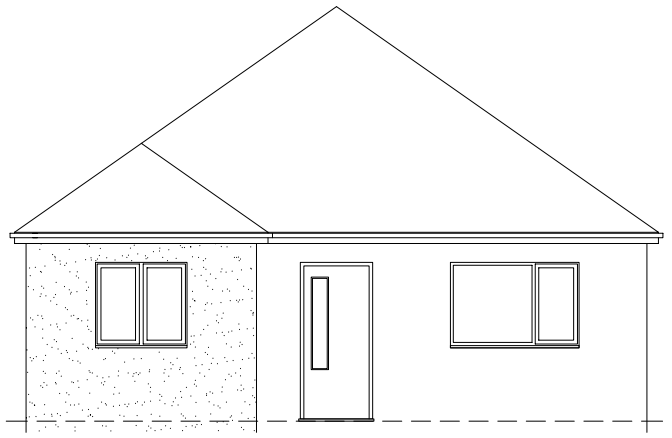

SIDE ELEVATION (WEST) 1:100

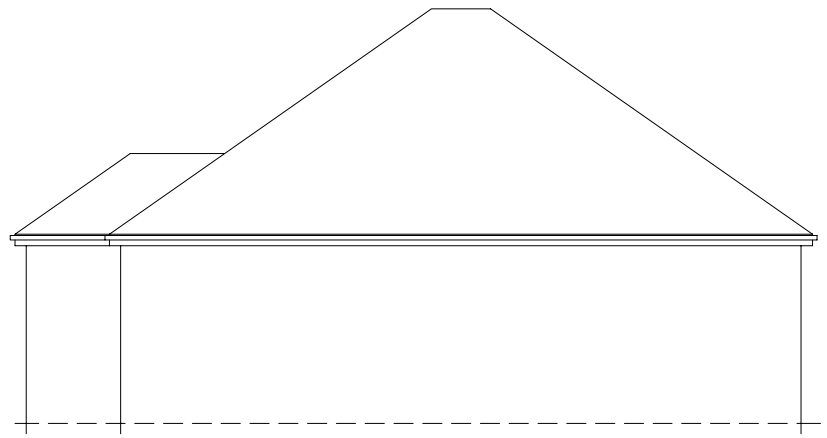

FLOOR PLAN 1:100

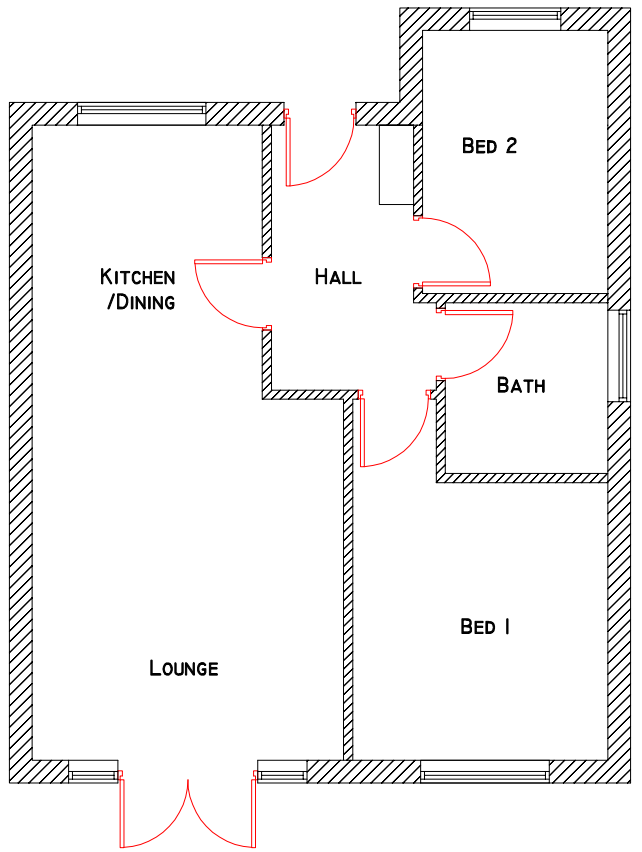

REAR ELEVATION 1:100

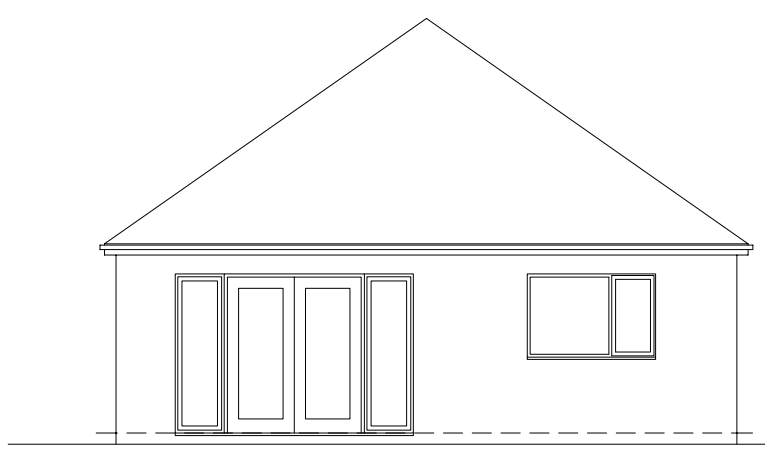

SIDE ELEVATION (EAST) 1:100

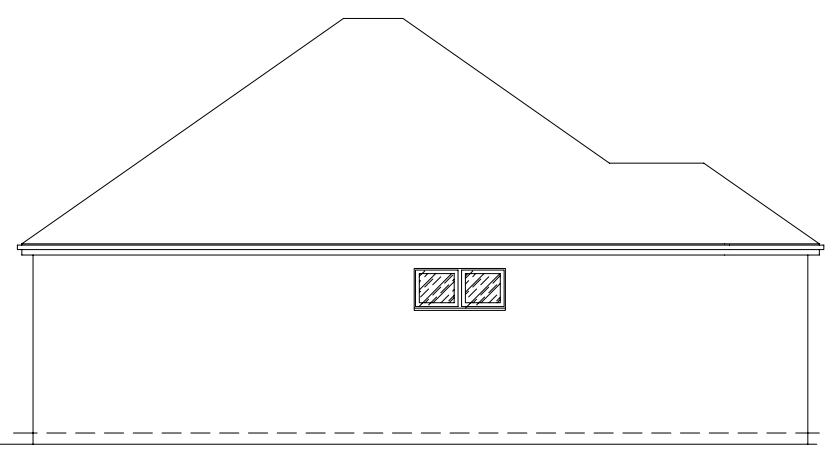

SCALE BAR METERS

0 1 2

UNLESS OTHERWISE SPECIFIED: DIMENSIONS ARE IN MILLIMETERS SURFACE FINISH: TOLERANCES: LINEAR: ANGULAR:	STATUS SURVEY		
NAME ADAM TATTON	DATE 14.01.2023	REV 0	TITLE: PLANS AND ELEVATIONS AS EXISTING
SCALE: 1:100 ON A3	PROJECT: 71A CELLARHEAD RD, ST9 0HW PROPOSED EXTENSION	WEIGHT:	DWG NO. 001800 001