Extract from Table A2 WIS 4-08-02

Processed granular bedding and sidefill materials for flexible pipes.

Pipe nominal bore (mm) see note (d)	Nominal maximum particle size (mm)	Materials specified in British Standards see note (a)
100	10	10mm nominal single size
Over 100 to 150	15	10–14mm nominal single size or 14mm to 5mm graded
Over 150 to 300	20	10–14mm or 20mm nominal single size or 14mm to 5mm graded or 20mm to 5mm graded
Over 300 to 500	20	14 or 20mm nominal single size or 14mm to 5mm graded or 20mm to 5mm graded
Over 550	40	14 – 20mm or 40mm nominal single size or 14mm to 5mm graded or 20mm to 5mm graded or 40mm to 5mm graded

Notes:

(a) Processed granular materials to include aggregates to BS 882, air-cooled blast furnace slag to BS1047 and lightweight aggregates to BS 3797

(c) For the purpose of this table, PE pipe of 630mm O.D. can be regarded as having nominal bores of over 550mm, irrespective of wall thickness.

(d) Nominal bore is used in preference to DN because of the different nominal size classifications for flexible pipes

Minimum recommended trench widths for structured wall pipes in poor ground conditions

Native Soil Modulus between 3 and 4 Mpa
Typical Soil Classifications : Very loose gravel, loose sand, medium dense clayey silty sand, firm clay

Nominal Pipe Diameter (mm)	150	225	300	375	450	525	600	750	900
Minimum Trench Width (mm)*	450	525	600	750	900	1050	1200	1500	1800

* A vertical trench face has been assumed to allow a modulus of 7 Mpa to be achieved for the pipe bedding and sidefill material.

Other assumed values: Depth of cover = 6.0 metres (max)
Traffic Loading = Main Road
Pipe stiffness = SNB

Note. Where the native soil modulus is below 3Mpa or the depth of cover exceeds 6 metres guidance should be sought from the pipe manufacturer regarding structural design and installation details.

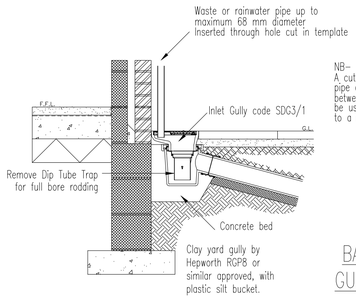

NB–
A cut length of 150 mm SuperSleve pipe and a 150 mm Coupling inserted between the Hopper and the base can be used to increase the gully depth to a maximum of 600 mm.

BACK INLET GULLY DETAIL (1:20)

RODDING EYE PIPE DETAIL (1:20)

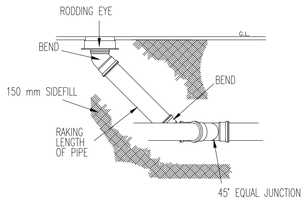

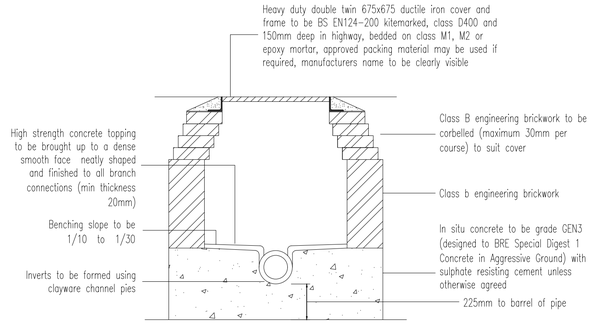

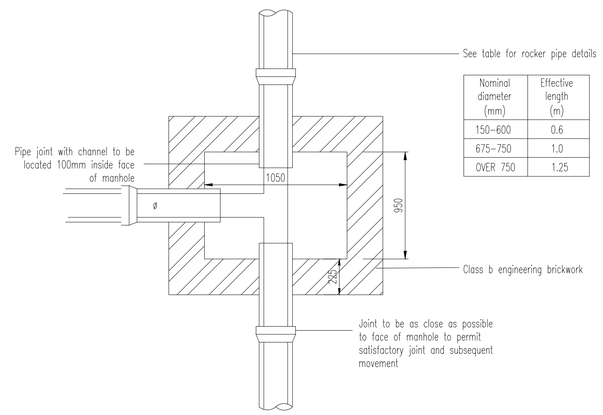

Nominal diameter (mm)	Effective length (m)
150–600	0.6
675–750	1.0
OVER 750	1.25

TYPICAL MANHOLE DETAIL–TYPE E SHALLOW MANHOLE (1:20)

Max depth from ground level to soffit of pipe <1.0m the design of the manholes will need to comply with the undertaker's safety policy

Additional General Notes

1. Position, size, depth, capacity, condition & status of existing drainage systems are not known. The design of the foul and surface water drainage assumed that no pumping, storage, modification, diversion, abandoning or improvement works are required on the existing systems.
2. The design assumes a gravity connection for foul and surface water systems is possible. If the existing sewers are not deep enough then pump stations will be required.
3. All works are assumed to be within public highway or within the land owners lands & no works are required on third party land owners property.
4. All works within the public highway to be reinstated to the highway authority requirements. All drainage connections onto adoptable drainage systems shall be carried out to the water authority's approval.
5. The contractor must allow for any fee's required for road and sewer opening permits, sewer connections and make the appropriate applications.
6. All insitu and precast concrete products shall comply with class DS1 requirements for sulphate exposure in accordance with the BRE Special Digest 1, Concrete in Aggressive Ground (2001) Part 1: Table 2.
7. Manhole covers and frames shall comply with the relevant provisions of BSEN 124, have 600x600mm clear openings and be of a non-rocking design without cushion inserts and be kitemarked. Load class D400 in trafficked areas and load class B125 in footways, landscaped and pedestrian areas. Where required, covers shall be recessed to receive the Architects specified finish.
8. The chamber size of manholes with more than one connection in them may need to be increased an increment to accommodate the connections and bends.
9. All u-PVC pipes and fittings shall comply with WIS 4-35-01 and shall be kitemarked.
10. Pipes to be laid in Class "S" bedding (150mm granular bed and surround) unless specified. Where depth of cover to the pipe barrel is less than 1.2m under vehicular trafficked areas and 0.9m under footways/gardens then Class 'Z' bedding should be provided.
11. Plastic channel sections in manholes are not acceptable and clayware is to be used. Plastic channels are difficult to set in concrete and a satisfactory finish cannot be obtained on the benching.
12. The strength of vitrified clay pipes (if used) to be 40kN/m for 100ø, 40kN/m for 150ø, 45kN/m for 225ø and 72kN/m for 300ø. All concrete products to be Class 120 to EN 1916/BS 5911-1:2002.

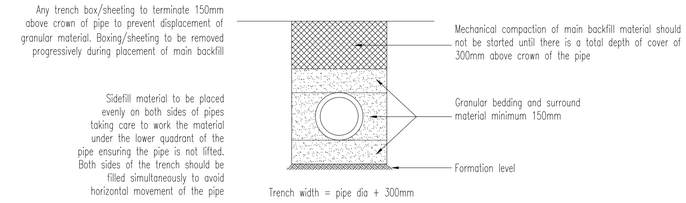

TYPICAL DETAIL THROUGH CLASS S BEDDING (1:20)

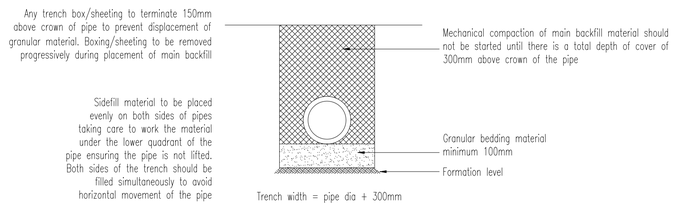

TYPICAL DETAIL THROUGH CLASS F BEDDING (1:20)

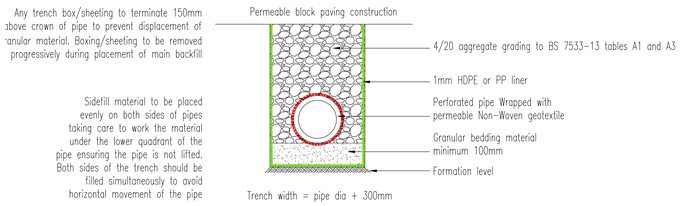

TYPICAL DETAIL THROUGH PERFORATED PIPE TRENCH (1:20)

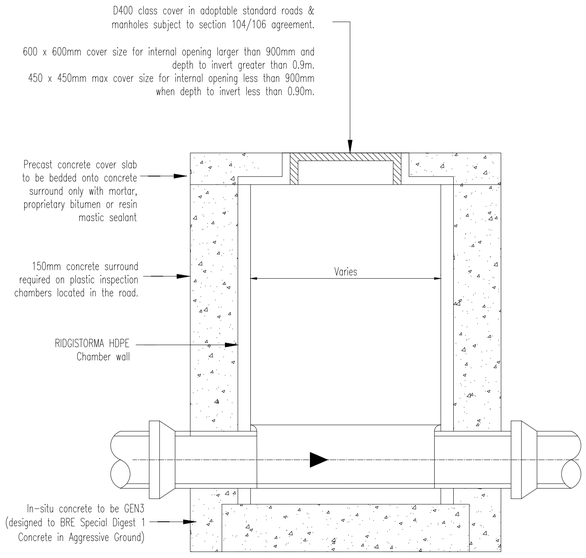

HDPE MANHOLES WITH 150mm CONCRETE SURROUND. (1:10)

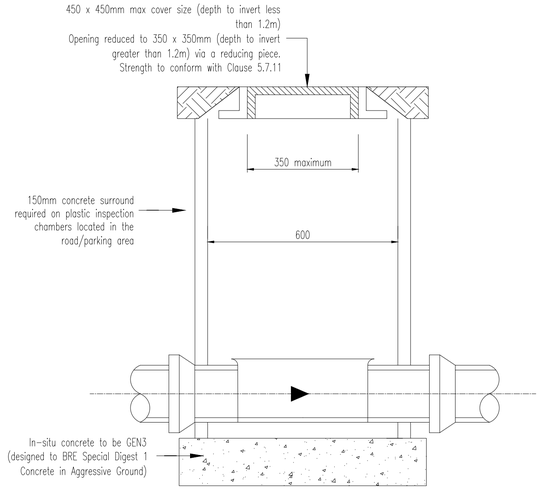

TYPICAL 600–450ø PPIC INSPECTION CHAMBER (1:10)

1:10 @ A1
0.2m 0 0.2m 0.4m 0.6m 0.8m 1m

1:20 @ A1
0.4m 0 0.4m 0.8m 1.2m 1.6m 2m

N O T E S

General Notes

1. This drawing is to be read in conjunction with all relevant ARP and Architects' drawings and project specifications.
2. All drainage works shall be carried out in accordance with the relevant parts of BSEN 752 'Drains and Sewer Systems Outside Buildings', the current Building Regulations and the Local Authority Building Control specifications and requirements.
3. The location, size and depth of all existing drains/sewers and services shall be established by the contractor prior to commencement of works on site. Any discrepancies from the information indicated on these drawings shall immediately be brought to the attention of the engineers.
4. All levels and dimensions shall be verified on site prior to commencement of any works. Any discrepancies shall immediately be brought to the attention of the engineers.
5. All pipes shall be laid with soffits level. All manhole/inspection chamber invert levels shown are for the outlet pipe (unless specified otherwise). All pipe runs shall be laid to the levels indicated.
6. All private foul and surface water pipes to be 100mm ø unless stated otherwise.
7. All connections to public sewers to be a minimum of 150mm ø.
8. All private manholes within drives to have B125 covers with concrete collar, all others to be A15.
9. All private backdrop manholes to be 900mmø PCC chambers unless stated otherwise.
10. 450mmø chambers for depths greater than 1.2m, restricted access opening to 350mm is required for safety reasons.
11. All RWP's & SVP's connections to be 100mm dia (unless specified otherwise by the Architect). Gully connections to be 150mm dia.
12. All RWP's, SVP's and connections are shown indicatively or to the latest Architects drawings. Position of down pipes must be confirmed from Architects drawing before laying underground pipework. All down pipes should be provided with a roddable access point above the FFL.
13. All private drainage laid within 1m from tree canopies and hedges to have concrete bed and surround.
14. Filled ground or soft spots must be excavated, backfilled and consolidated before any drainage works are carried out.
15. All excavations in areas of high water tables and granular materials with high sand/silt contents shall be wrapped with a suitable geotextile filter membrane to prevent migration of sands/silts. Full height clay stanks across trenches and/or at manhole locations at 25m intervals to restrict water movement along the excavation shall be provided.
16. No water should be allowed to discharge from any private drives onto the adoptable highways. All private gullys and channel drainage positions shown may vary to suit on site working conditions.

Rev	By	Date	Revision	Chk	Apvd
A	MW	13.12.22	Minor updates	MW	MI
/	JC	29.07.21	Issued for approval	MW	MI

ARP ASSOCIATES
Chartered Consulting Engineers
This is The Space • 59 Quay Street • Manchester M3 3EJ
☎ 0113 2458498 ✉ manchester@arpnorthwest.co.uk 🌐 www.arpassociates.co.uk

ARP Associates is a trading division of ARP Geotechnical Ltd, a company registered in England and Wales with company number 3771811, whose registered office is at 5/6 Northwest Business Park, Servia Hill, Leeds LS6 2QH

TITLE
DRAINAGE DETAILS

PROJECT
COMPTON MILL, LEEK

CLIENT
TRICAS CONSTRUCTION LTD

DRAWING STATUS
PRELIMINARY

Scale	Date	Drawn
As shown @ A1	JUL 21	JC
		Chk. MW

Drg. No. NW151/01/07 Rev A