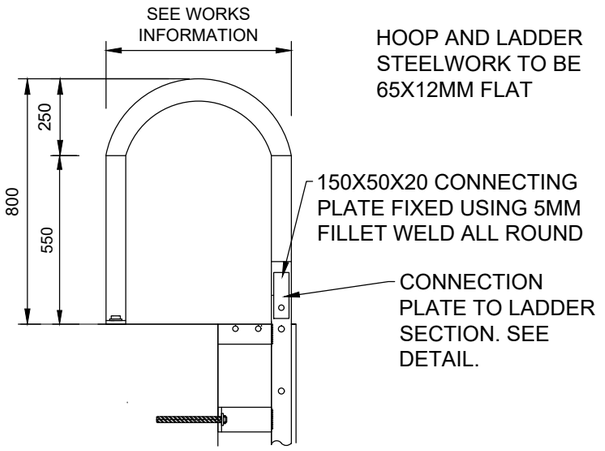

EQUAL HOOPS DETAIL
SIDE ELEVATION
SCALE 1:20

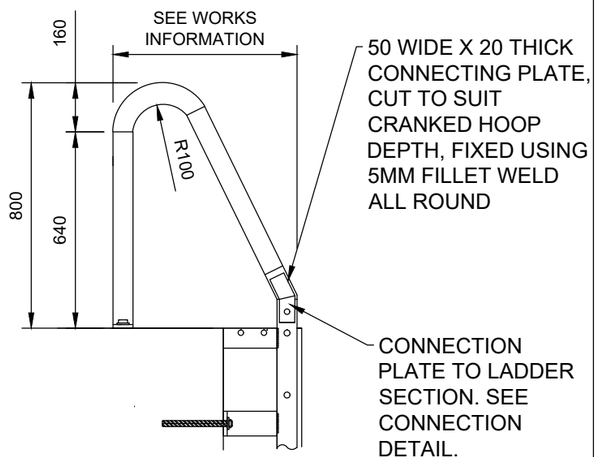

ANGLED HOOPS DETAIL
SIDE ELEVATION
SCALE 1:20

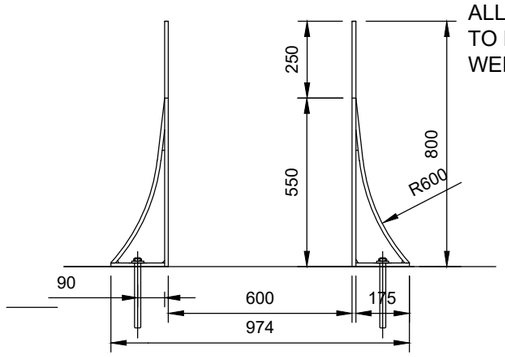

EQUAL HOOPS DETAIL
REAR ELEVATION
SCALE 1:20

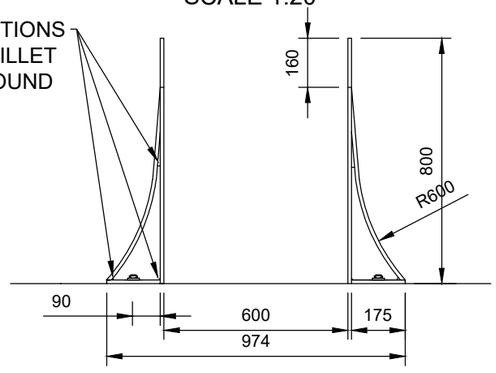

ANGLED HOOPS DETAIL
REAR ELEVATION
SCALE 1:20

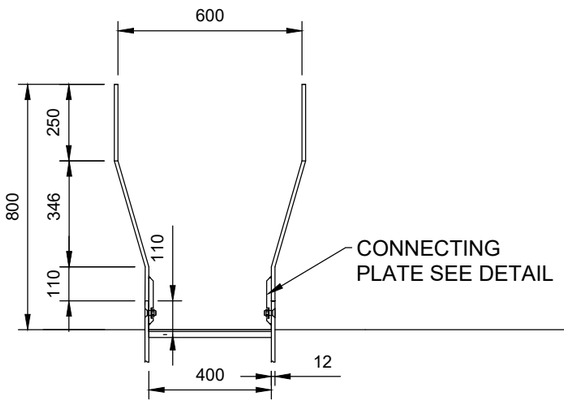

EQUAL HOOPS DETAIL
FRONT ELEVATION
SCALE 1:20

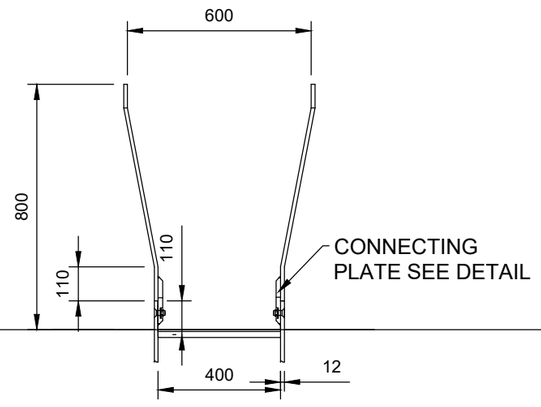

ANGLED HOOPS DETAIL
FRONT ELEVATION
SCALE 1:20

1:20
400mm 0 400mm 800mm 1200mm 1600mm 2000mm

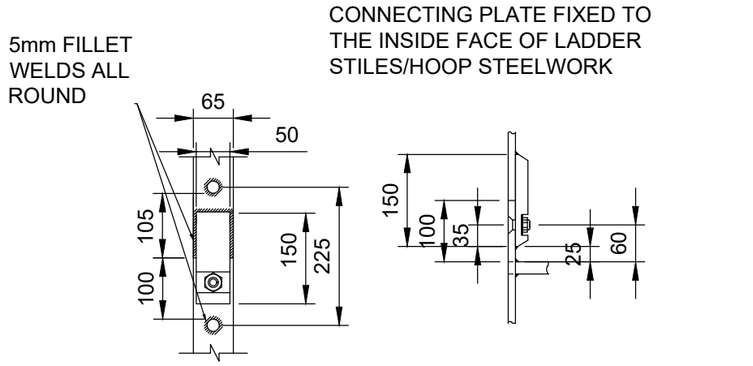

CONNECTION BETWEEN LADDER SECTIONS
& TOP LADDER SECTION TOO HOOPS
Scale 1:10

1:10
200mm 0 200mm 400mm 600mm 800mm 1000mm

LOCK LADDER TABLE

ASSUMPTIONS:

- RUNGS ARE AT 225MM CENTRES
- RUNGS ARE 20MM Ø
- TOP OF TOP RUNG IS 6MM BELOW TOP OF COPING
- STILES EXTEND 100MM ABOVE TOP OF TOP RUNG FOR ATTACHMENT OF LADDER SECTIONS/HOOPS
- STILES EXTEND 105MM BELOW BOTTOM OF BOTTOM RUNG WHERE ADDITIONAL LADDER SECTION IS TO BE ATTACHED.
- FOR BOTTOM LADDER SECTION STILE EXTENDS 40MM BELOW BOTTOM OF BOTTOM RUNG
- MAX. LENGTH OF LADDER SECTION IS 2400mm, MAX. WEIGHT PER SECTION IS 50KG

NO. OF RUNGS	LADDER LENGTH	NO. OF LADDER SECTIONS	SUPPORT POSITIONS
8	1725	1	3
9	1950	1	3
10	2175	1	3
11	2400	1	3
12	2625	2	4
13	2850	2	4
14	3075	2	4
15	3300	2	4
16	3525	2	5
17	3750	2	5
18	3975	2	5
19	4200	2	5
20	4425	2	6
21	4650	2	6
22	4875	3	6
23	5100	3	6
24	5325	3	7
25	5550	3	7
26	5775	3	7
27	6000	3	7
28	6225	3	8
29	6450	3	8
30	6675	3	8
31	6900	3	8

Notes:

1. All dimensions are in millimetres unless otherwise shown.
2. Drawing should be read in conjunction with all other drawings and the Works Package (WP).
3. During the planning of work the assessment of risks from overhead or underground services must be undertaken.
4. All works are to be carried out in accordance with Canal & River Trust Civil Engineering Specification.
5. All dimensions to be checked on site prior to fabricating new ladder.
6. All MS to be hot dip galvanised to BS EN ISO 1461:2009.
7. The bottom rung must be at least 900mm below the lowest water level, so that someone in the water can gain a foot hold to assist their escape.
8. Position new recess centre line so that cutting of adjacent sandstone copings is minimised (if present).
9. Where new engineering brickwork is installed to form ladder recess, take care to bond new brickwork into adjacent courses and fix into cut face with wall ties. Wall ties to be used every 300mm vertically. Ensure all joints are properly filled with mortar. Mortar type see works information.
10. When enlarging recess coring should be avoided, and the exposed outer finish should not be rough/cut bricks.
11. The rise between ladder treads should be 225mm.
12. The rungs on new ladders should have foot space behind the rungs of 180mm - 220mm.

1	01/08/22	Addition of Scale Bars	AH

Revisions:

Canal & River Trust

Design and Development

Project: TRUST STANDARD DETAILS

Drawing Title: NEW LOCK LADDER & HOOPS DRAWING 2 OF 2

CANAL & RIVER TRUST COPYRIGHT RESERVED

Drawn By:	Checked By:
AH	SH
Authorised By:	Date:
HH	06/07/2021
Drawing Scale (A3)	Rev.
AS SHOWN	1

Drg. No. STD-CRT-ZZ-ZZ-03-DR-C-07

File Location: