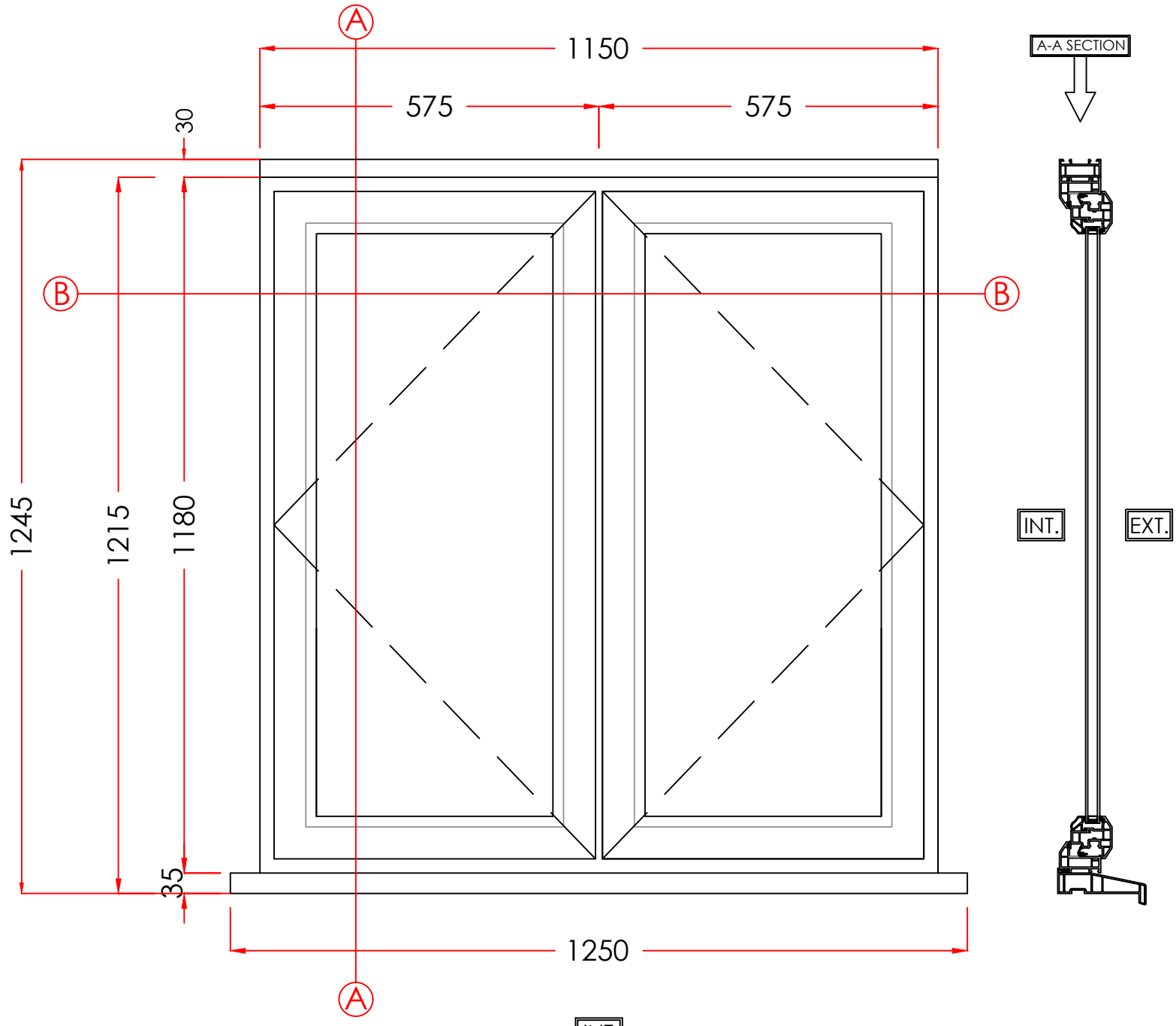

1. FRONT BEDROOM LEFT

MATERIAL - PVCu
INTERNAL & EXTERNAL COLOUR - WHITE
GLAZING - 24MM SEALED UNITS

Scale - 1:10
(Produced on A3 Paper)

Sheet 1Of 10

Drawers Initials.
DJP

CONTRACT No.: 30354184 **Date: 10.06.22**

PROPOSED: Replacement windows and doors.
AT:
(INSTALLATION ADDRESS) Wharf Cottage, Park Lane
Endon
Stoke On Trent
Staffordshire
ST9 9JA

Anglian Home Improvements

VIEWED EXTERNALLY

THESE DRAWINGS ARE THE PROPERTY OF ANGLIAN HOME IMPROVEMENTS AND MUST NOT BE USED, DISTRIBUTED, LOANED OR COPIED WITHOUT THE EXPRESS PERMISSION OF ANGLIAN HOME IMPROVEMENTS.

Scale Bar 1:10(mm)

0 100 200 300 400 500 600 700 800 900 1000 1100 1200 1300