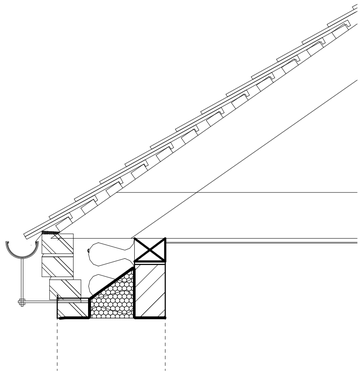

TYPICAL EAVES DETAIL
TO DWELLING & GARAGE

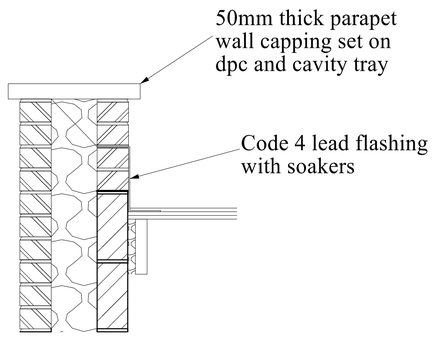

TYPICAL PARAPET
VERGE DETAIL
TO DWELLING

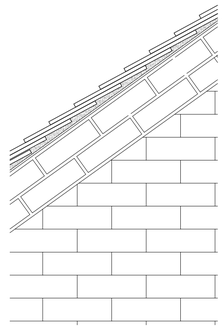

VERGE ELEVATION
TO GARAGE

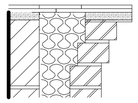

VERGE SECTION
TO GARAGE

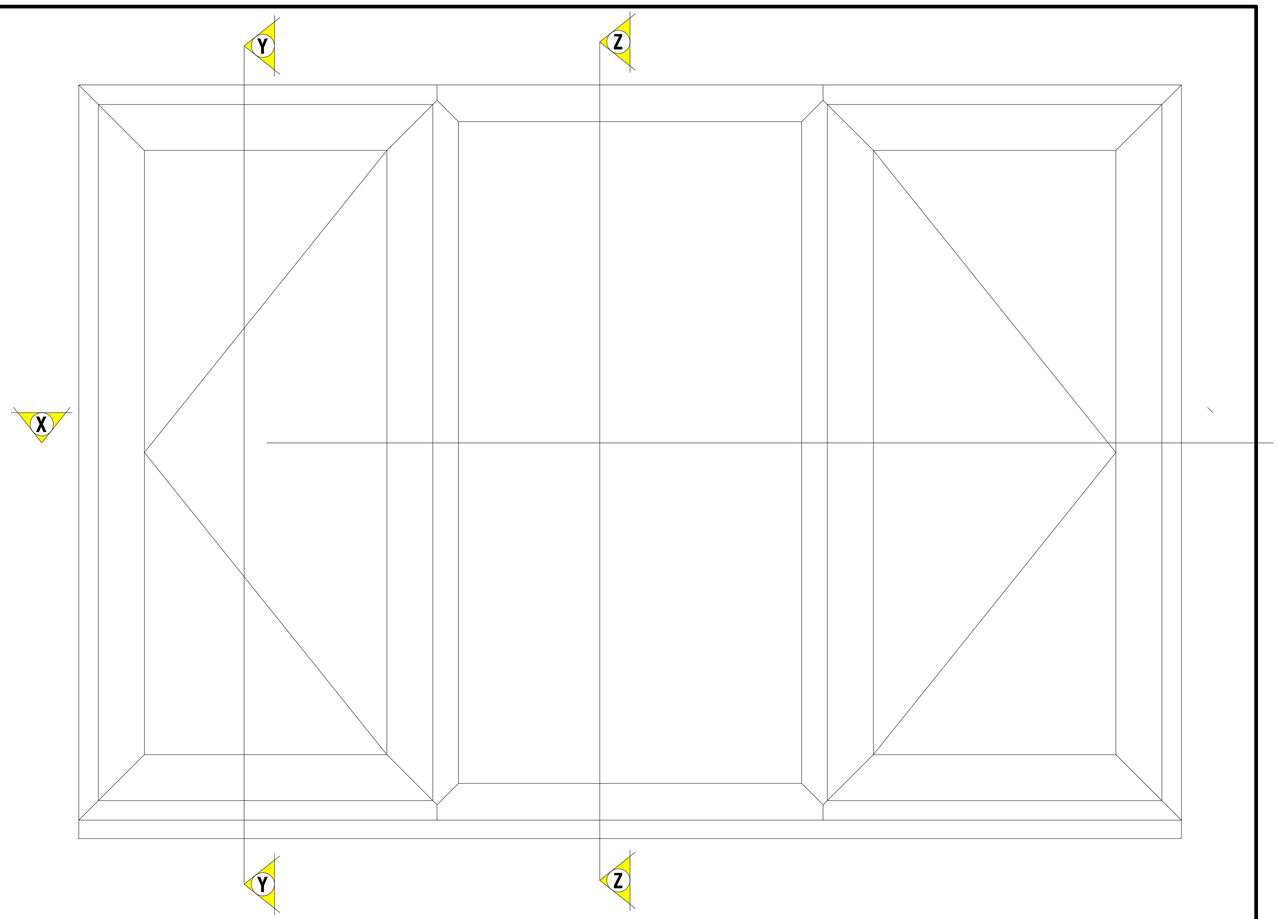

Section X-X



Section Y-Y

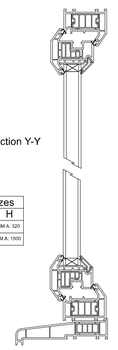

Section Z-Z

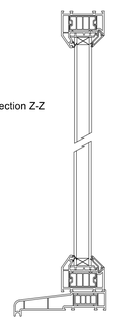

Window Sizes	W	H
Min	DIM A. 400	DIM A. 320
Max	DIM A. 750 DIM B. 3000	DIM A. 1500

WINDOW DETAILS

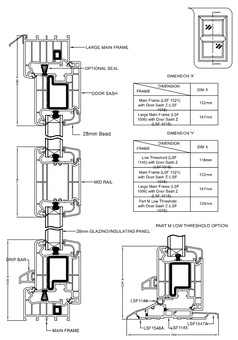

SINGLE DOOR
DETAIL

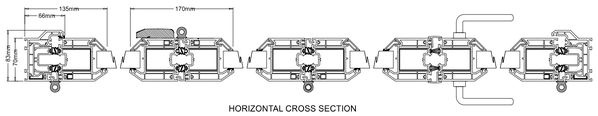

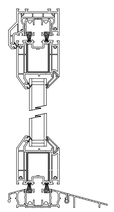

VERTICAL CROSS SECTION

BI-FOLDING DOOR DETAIL

MR. A. SAXON

DATE APRIL 2020

PROPOSED NEW DWELLING

ON
LAND ADJACENT TO
STONEWALLS,
FOXT,
STOKE-ON-TRENT.
ST10 2HN

SCALE (at A1):
ROOF DETAILS 1:10
DOOR & WINDOW
DETAILS 1:5

DRAWN BY:

MALCOLM SALES
QUANTITY SURVEYORS, DESIGNERS
& BUILDING COST CONSULTANTS
CHURCHILL SUITE,
LULWORTH HOUSE,
51, HIGH STREET,
CHEADLE, STOKE-ON-TRENT,
STAFFS. ST10 1AR
TEL: 01538 757233
MOB: 07889 225437
E-MAIL: Malcolm.sales@salesqs.co.uk

AS PROPOSED

FOR DISCHARGE OF
PLANNING CONDITIONS

DRAWING NR.1902/09/07