

This drawing is copyright and should not be reproduced without permission.
The contractor is responsible for checking dimensions and levels and drainage inverts prior to commencing works - any discrepancy to be verified before proceeding.-figured dimensions only to be worked to: DO NOT SCALE.
All work to be carried out in accordance with the current Building Regulations, British Standards/Codes of practice and statutory authority bye -laws and recommendations.

Revision	Comments	Date



proposed site layout plan 1:200

Appendix 3: Tree protection barrier specification and above-ground stabilisation systems (Figures 2 & 3 of BS 5837: 2012)

Figure 2 **Default specification for protective barrier**

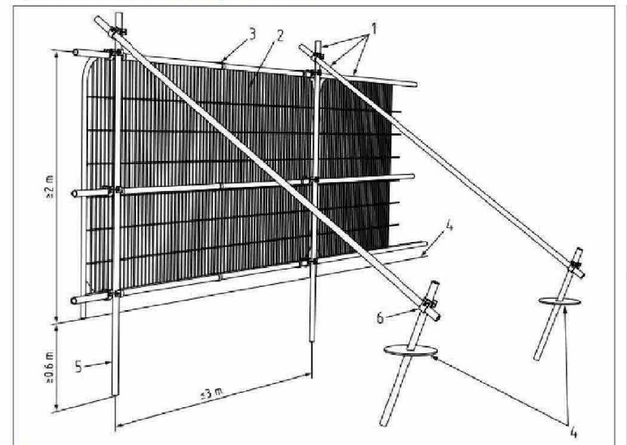

Figure 3 **Examples of above-ground stabilizing systems**

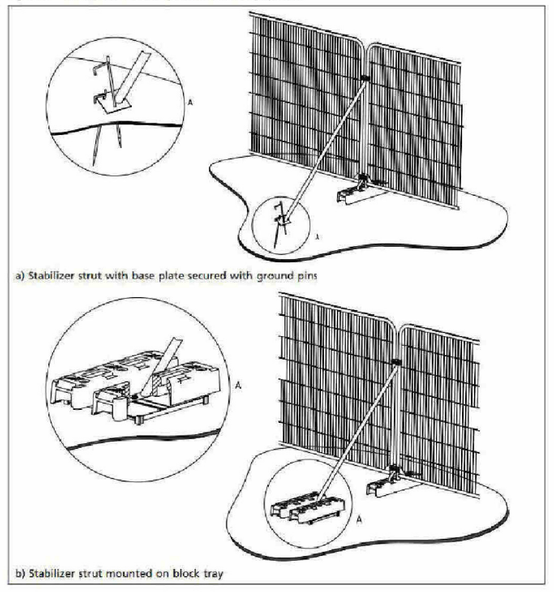

Tree protection fencing



signage for
Tree protection fencing

Robert Berry MCIAT
Architectural services
10 Truro Close, Congleton, Cheshire, CW12 3BD
t : 01260 279098 m : 07790 179093 e: robert.berry10@yahoo.co.uk

Client
Mr & Mrs M Hall

Project
Proposed dwellings at rear of Green Acres, Gun Battery Lane, Biddulph Moor

Title
Scheme layout plan

Scale @A2 1:200

Date July 2020

Drg no 1790/05 Rev