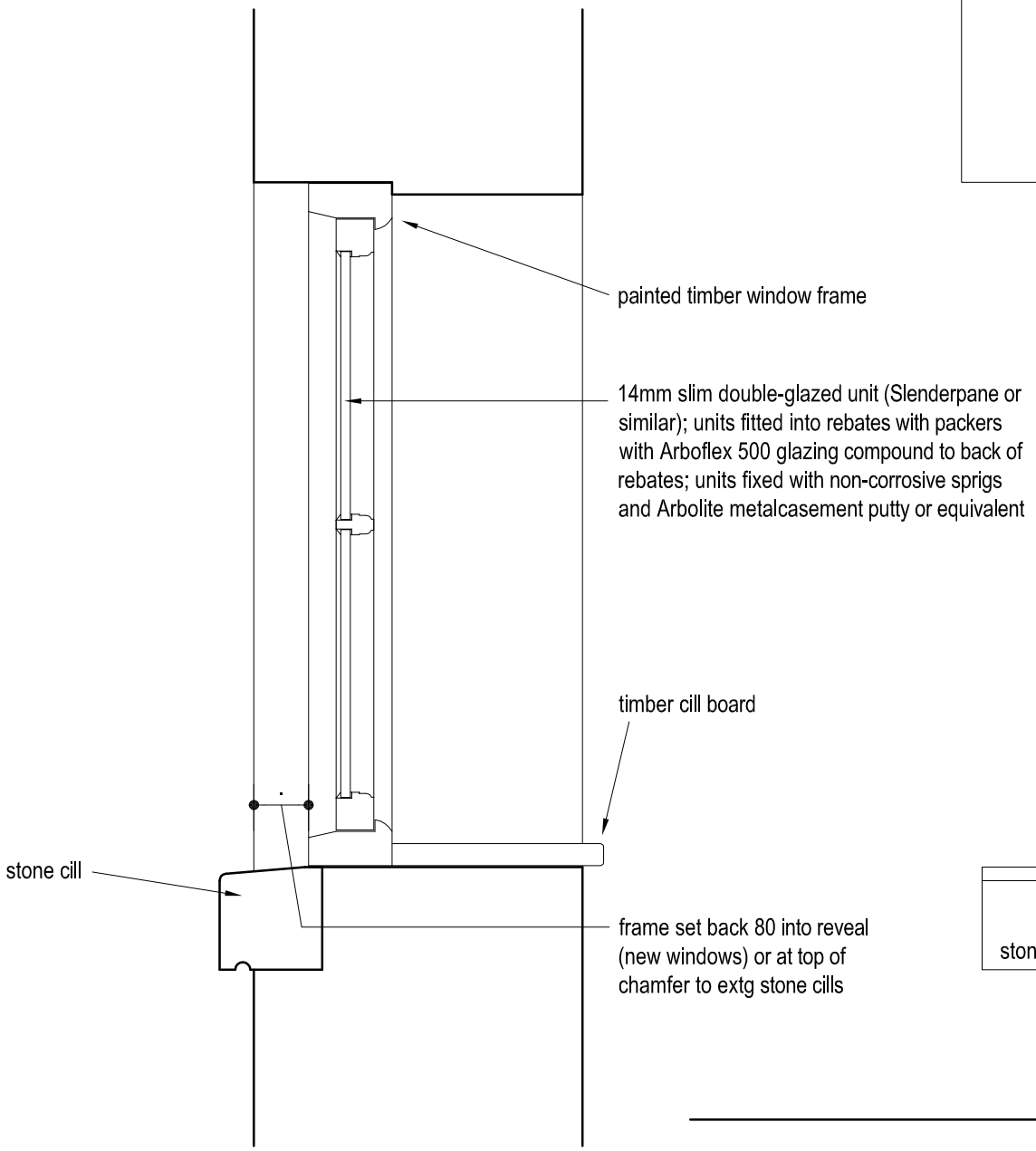


VERTICAL SECTION

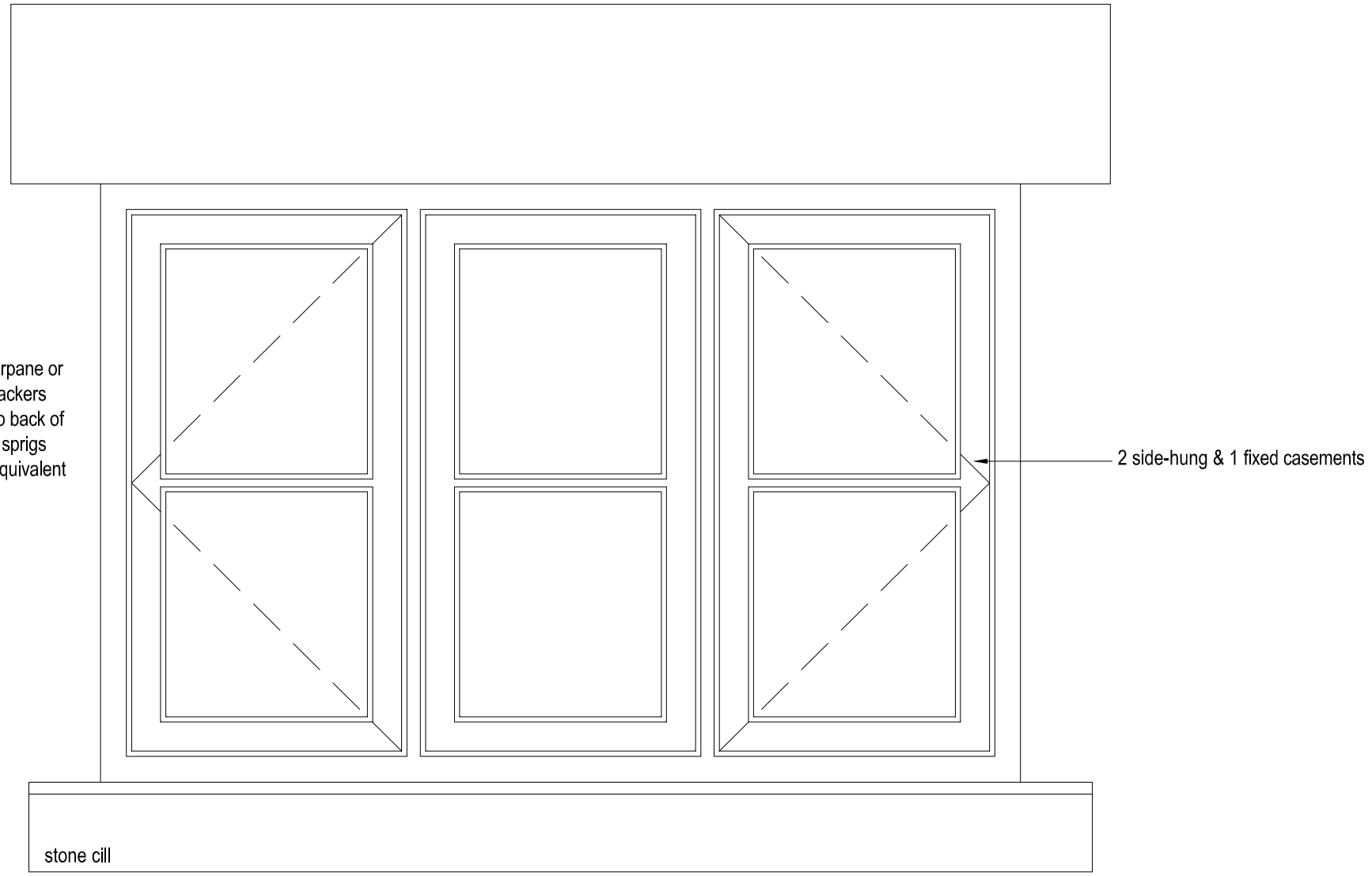


EXTERNAL ELEVATION

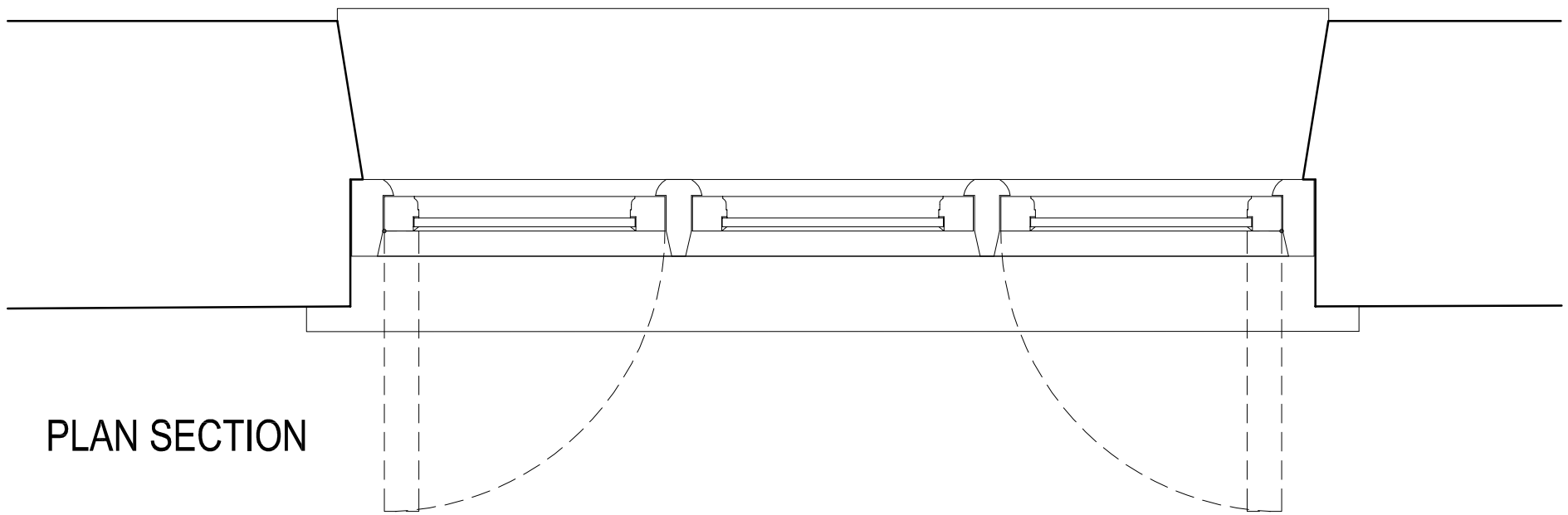

PLAN SECTION

0 100 200 300 400 500mm

Revisions

| | | |
|---|---|---|
| . | . | . |

| | | | | | |
|---|---|---|---|---|---|
| job | Heaton Low Farm, Heaton Extension and Alterations | | | | |
| title | Typical Window Details | | | | |
| date | scale | | drawn by | dwg. no. | rev. |
| 10.07.20 | 1/10 @ A3 | | . | HLF-105 | . |

Ian Ankers architecture
Building and Design Consultants
Ryecroft Farm, Rushton Spencer, Macclesfield, SK11 0RP
t 01260 546944
e ian@ianankers.co.uk
w www.ianankers.co.uk