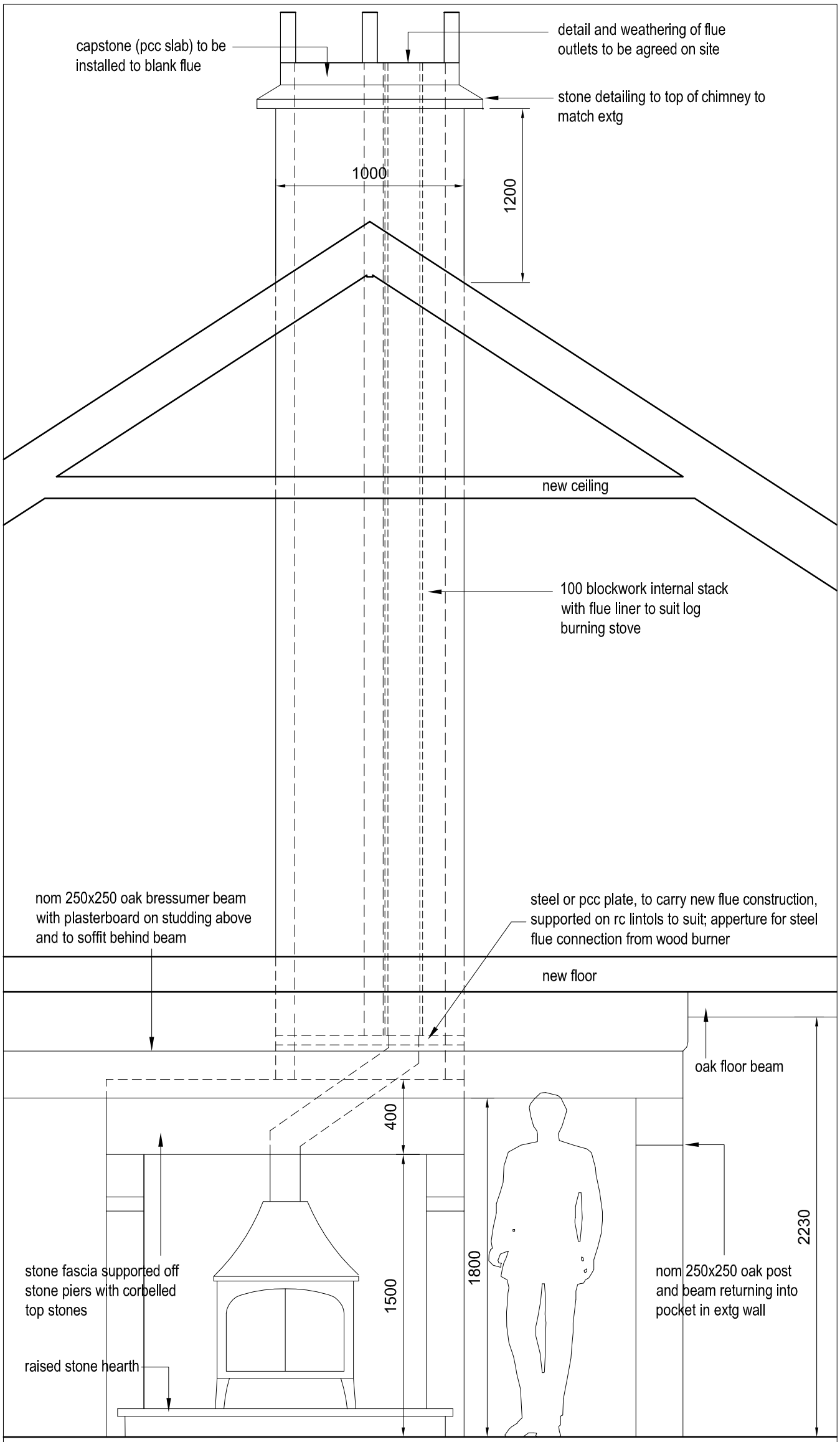

SECTIONAL ELEVATION

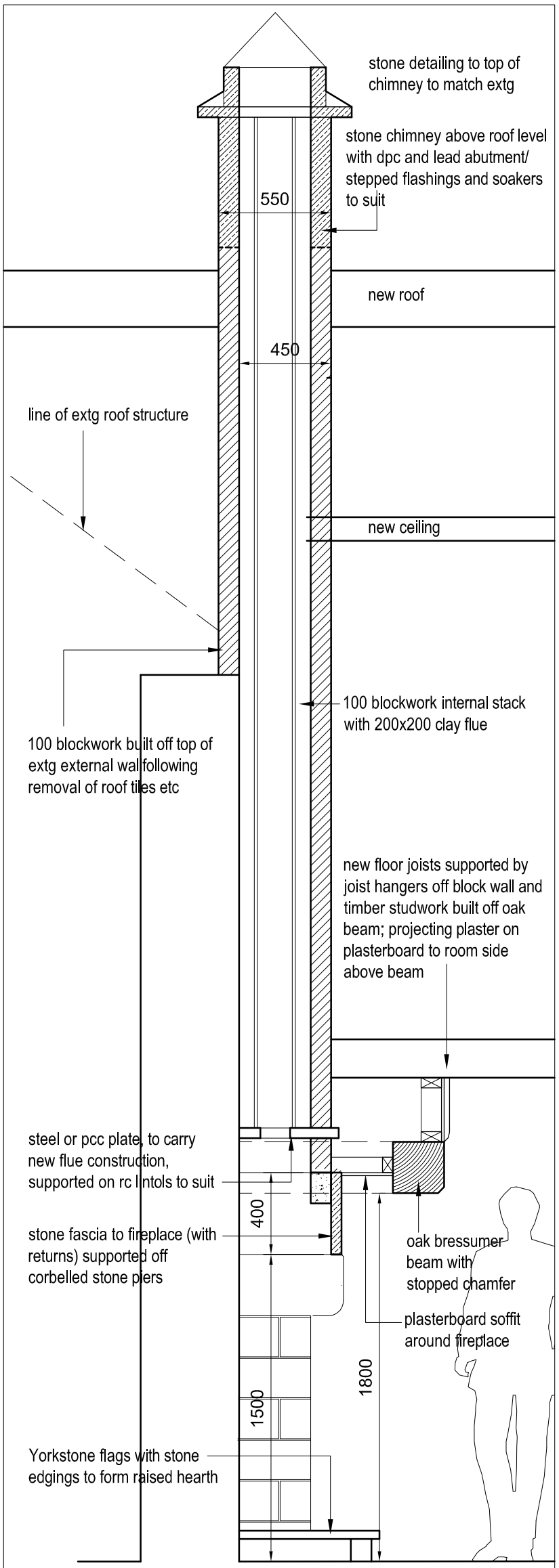

SECTION C-C

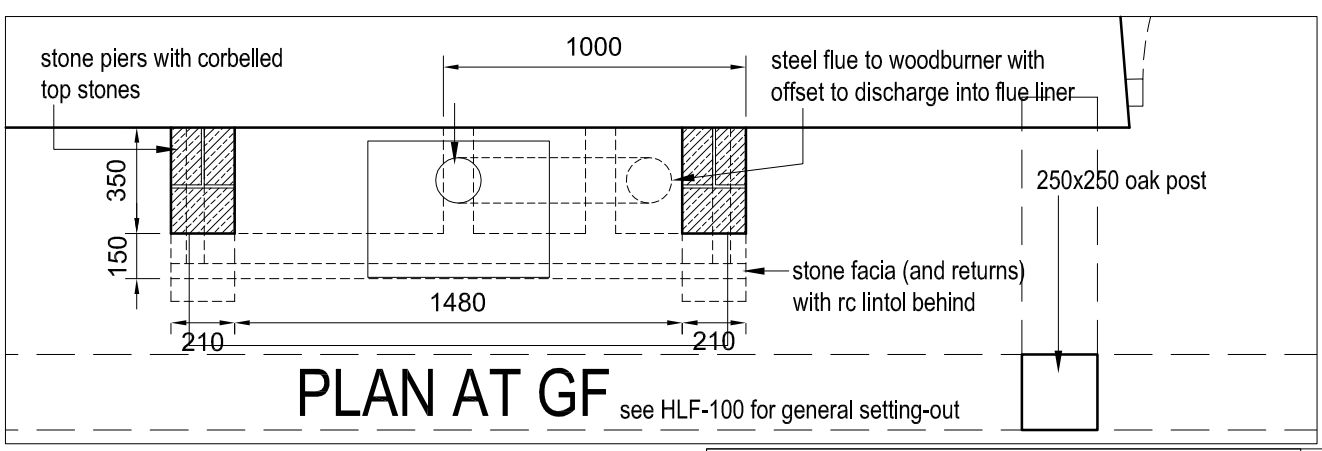

PLAN AT GF

see HLF-100 for general setting-out

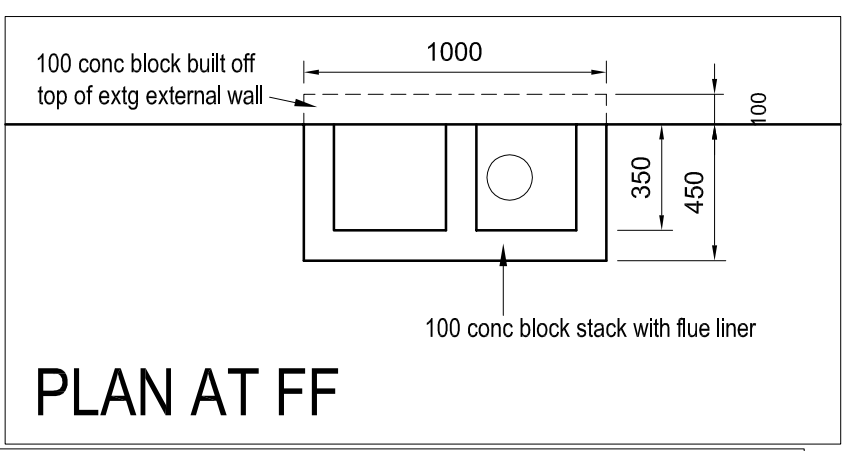

PLAN AT FF

0 1 2m

job	Heaton Low Farm, Heaton Extension and Alterations
title	Fireplace and Chimney Details
date	09.07.20
scale	1/25 @ A3
dwg. no.	HLF-104
rev.	P1

Ian Ankers architecture
Building and Design Consultants
Ryecroft Farm, Rushton Spencer, Macclesfield, SK11 0RP
t 01260 546944
e ian@iananders.co.uk
w www.iananders.co.uk