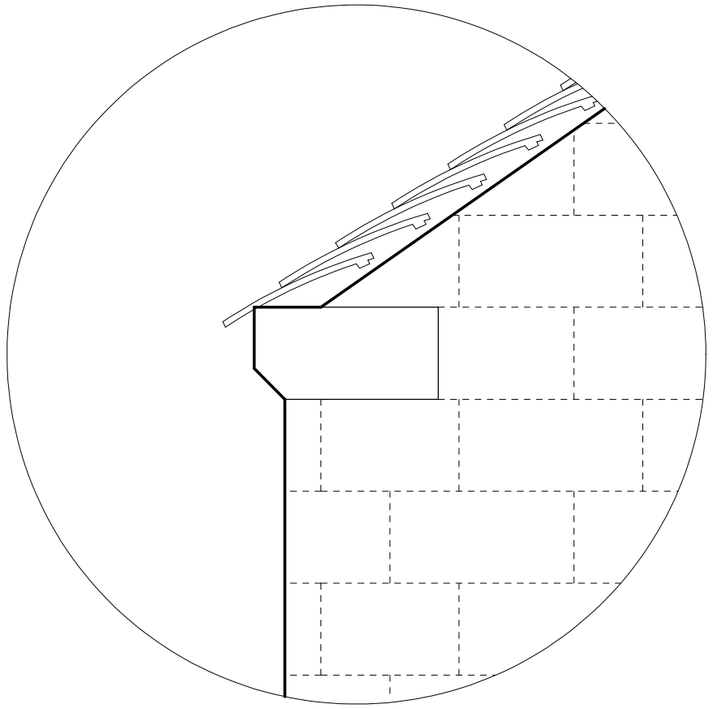

GABLE ELEVATION

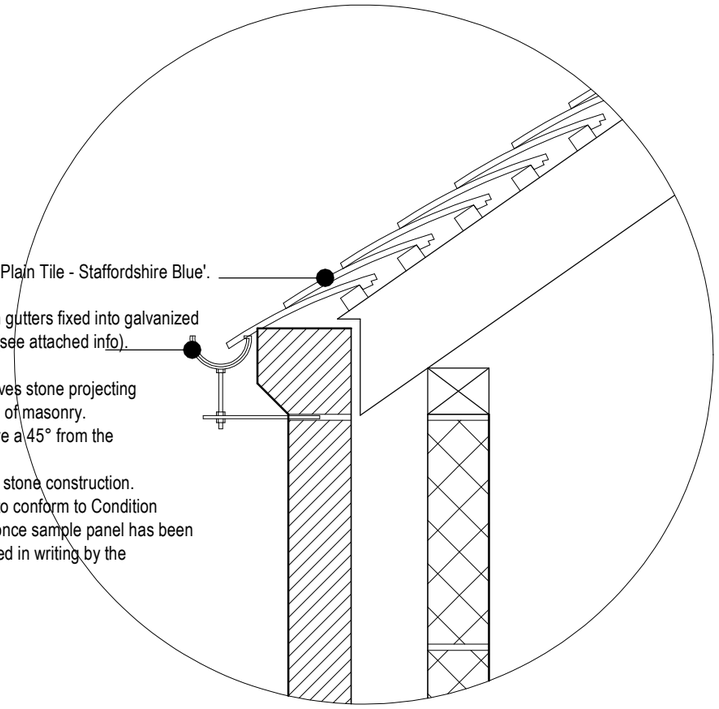

'Marley Hawkins Clay Plain Tile - Staffordshire Blue'.

Marley Foundry Finish gutters fixed into galvanized rise and fall brackets (see attached info).

300 x 140mm high eaves stone projecting 50mm from outer face of masonry.
Eaves stone to be have a 45° from the base a shown.
Eaves to be of natural stone construction.
Wall finish + pointing to conform to Condition 5 which shall be met once sample panel has been inspected and approved in writing by the Local Authority.

SECTION THROUGH GABLE

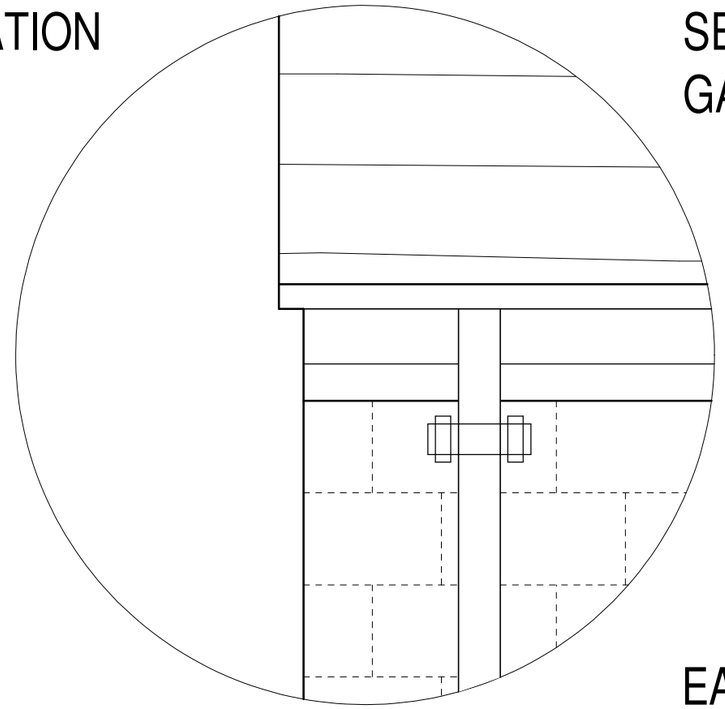

EAVES ELEVATION

NOTES -
All sizes shall be measured on site by the manufacturer.
Check on site prior to commencement.
These details are to form part of the planning proposal for drawing ref: 2015-2078-08 now 2015-2078-24
(always refer to the latest amended drawing).

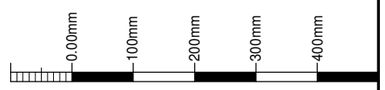

scale bar @ 1:10

Dr and Mrs Webster

PROPOSED DWELLING
STONE HOUSE,
MALTHOUSE ROAD,
ALTON, STOKE-ON-TRENT,
ST10 4AG

PLANNING CONDITIONS
EAVES + VERGE DETAILS

Date	Sheet	Scale
AUGUST 2020	A3	1:10
Drg No.	Rev.	Drawn
2015-2078-21	-	NAW

A -

SAMMONS Architectural LIMITED
Chartered Institute of Architectural Technologists Registered Practice
10 Cawdry Buildings, Fountain Street, Leek. ST13 6JP
Telephone: 01538 386002
E-mail: info@sammonsltd.co.uk
Web: www.sammonsltd.co.uk

This drawing is copyright.
All dimensions must be checked prior to commencement.