Figure 2 **Default specification for protective barrier**

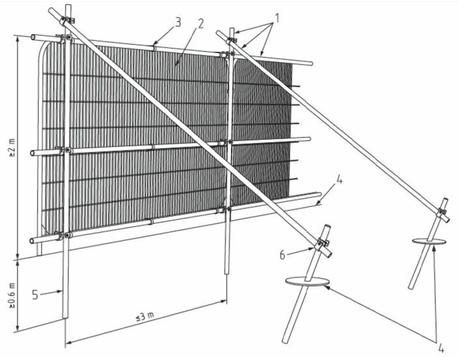

Key

1 Standard scaffold poles
2 Heavy gauge 2 m tall galvanized tube and welded mesh infill panels
3 Panels secured to uprights and cross-members with wire ties
4 Ground level
5 Uprights driven into the ground until secure (minimum depth 0.6 m)
6 Standard scaffold clamps

0 2 4 6 8 10m
1:200

N

6.9m
6.8m
T1-Sycamore
T2-Sycamore
6.5m
6.4m

New natural stone walling

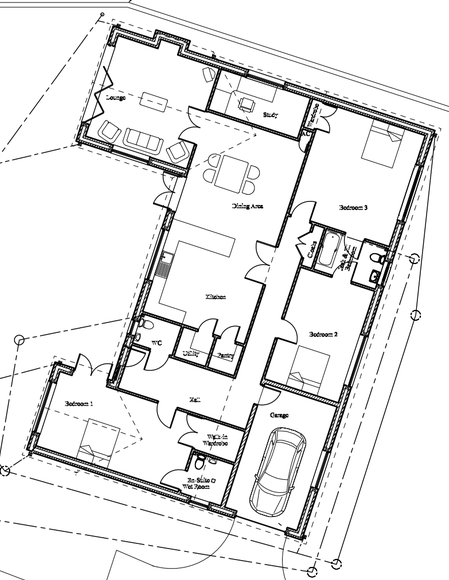

Soakaway

Existing drain and manhole

Manor House

Brandon House Farm

9.8m
9.8m
9.8m
T5-Ash

Tree Ref.	RPA Radius (Metres)
T1	6.24
T2	5.54
T5	9

Notes:

1. Contractors are advised to check all dimensions against the tree schedule. Tree canopies are symbolic only and are representative of the average spread; this may not represent the true outline. Note that the tree stem may not sit centrally to canopy. Tree stems are symbolic only and are representative of the tree category; this does not represent the stem diameter - see schedule for details.
2. The original of this drawing was produced in colour - a monochrome copy should not be relied upon.

Rev:	Date:	Status/Amendments:	By:

Key:

- Category A Tree / Group
- Category B Tree / Group
- Category C Tree / Group
- Category U Tree / Group
- Branch Spread
- Tree to be Removed
- Root Protection Area (RPA)
- First Significant Branch Direction
- Tree Protection Barrier
- Special Measures
- Tree Shadow

GROWING SINCE 1982
TREE HERITAGE
Tree Heritage Ltd, Unit 1 Sneyd Mill, Sneyd Street, Leek, Staffordshire, ST13 5HP
Telephone: 01538 384019
treeheritage.co.uk info@treeheritage.co.uk

Client:
Judith & Tom Hutchinson

Project:
Land adj. Brandon House Farm, Town End Road, Foxt

Drawing Title:
Tree Protection Plan

Scale:	Paper Size:
1:200	A2
Drawing Number: THL-0830-6	Date Created: 01/07/2020