# ARBORICULTURAL REPORT

**Client:** Mr Joe Stonier

**Site:** Land off Leek Road
Wetley Rocks
ST9 0AY

**Date:** 27 May 2020

**Ref.:** THL-R20-49

# CONTENTS


1.0 Introduction

2.0 Limitations of report

3.0 Method

4.0 Trees and Construction: General overview

5.0 Protection of trees that are retained

6.0 Arboricultural methods

7.0 Wildlife: timing of operations

8.0 Planning considerations

9.0 Arboricultural Impact Assessment

10.0 Cascade Chart for Tree Quality Assessment: Table 1 BS 5837:2012

11.0 Appendix A: Tree Survey Schedule

12.0 Appendix B: Tree Protection Barriers

13.0 Appendix C: Plans
- 13.1 Tree Constraints Plan
- 13.2 AIA Plan
- 13.3 Tree Protection Plan

## 1.0 Introduction

1.1 The purpose of this report is to be an aid to the design of the layout of the site. It identifies the better trees and specifies necessary protective measures that are required to keep the trees within the development. It may also give recommendations for remedial work that may be desirable to keep or improve the quality of the trees.

1.2 The survey complies with British Standard 5837:2012 *Trees in relation to design, demolition and construction – Recommendations*. All significant trees on the site have been inspected including any that may be on the boundary or on adjacent land that may be affected by any development. Included in the schedule of trees are the Root Protections Areas (RPAs) which are designed to give the minimum functionally rooting area to ensure the healthy survival of the retained trees on site. The relevant distance from each tree from which construction work should be excluded by the erection of a Protective Barrier is also listed.

1.3 The site visit was on 21 May 2020. Surveyor: Ben Williams. The weather conditions: Clear and very bright.

## 2.0 Limitations of report

2.1 The trees were inspected from ground level only and no invasive tools were used.

2.2 This report is valid for a period of 2 years as part of the planning application process. Due to the nature of trees the condition may change rapidly and therefore the safety of the trees cannot be guaranteed for the same period.

2.3 Trees may affect buildings by indirect influence of their roots on the substrate on which structures are built and by direct action on foundations, drains and other underground services. This report does not attempt to address these issues.

2.4 Trees are dynamic structures that can change rapidly and can never be guaranteed 100% safe: even if they were deemed safe on the day of the inspection, they can sometimes suffer damage in adverse weather conditions. All trees should be inspected following any bad weather.

## 3.0 Method

3.1 The survey was undertaken from ground level and includes all individual significant trees shown in position and numbered on the site plan. Some trees may be surveyed together and put in numbered groups e.g. G1, or woodlands e.g. W1. Hedges will also be listed e.g. H1.
The following information is collected and given in a schedule.

- Number
- Tree Species (Common Name)
- Height in metres
- Stem diameter at 1.5 metre above ground level in millimetres.
- Crown Spread at compass points NSEW in metres.
- Crown clearance (height of lowest branch above ground) in metres.
- First significant branch height (in metres) and direction (NSEW).
- Age Class (Young, Middle-aged, Mature, Over mature and Veteran)
- Physiological Condition (Good, Fair, Poor or Dead). This is an overall assessment of the health of the tree based on leaf size, colour, density, annual growth increments and die-back or dead wood.
- Structural Condition (comments on decay, cavities, disease and other defects and issues that will affect its suitability for retention).
- Recommendations (These are based on the previous two categories and may include pruning or removal amongst other recommendations).
- Estimated Remaining Contribution (in years <10, 10+, 20+, 40+)
- Category Grading:
  **U**= Low valued tree (may be unsuitable for retention due to its poor condition or less than 10 years contribution).

  **A**= High quality tree of good form with at least 40 years contribution.

  **B**= Moderate quality tree with 20>40 years contribution.

  **C**= Low quality tree (usually of poor form or condition). Also, trees of less the 150mm stem diameter (these may be considered for relocation). Category C trees should not be considered as a planning constraint.

  Subcategory:

  **1**= mainly Arboricultural Merit

  **2**= mainly Landscape Merit

  **3**= mainly Cultural or Conservation Merit

## 4.0 Trees and Construction: General overview

4.1 Trees are large dynamic organisms that have basic requirements to survive. The obvious part of the tree is the trunks and branches with the leaves that are essential for survival and these are easily damaged by machines etc. This damage though is easily avoided and obvious when it occurs. They have roots that anchor the tree into the ground but also take up moisture and oxygen as well as nutrients from the soil. Most tree roots are in the upper 0.5 metres of the soil and can extend well beyond the extent of the trees leafy canopy. Roots are easily damaged during any construction process although sometimes the immediate effect is not obvious. The main threats from construction work come from:

a) Compaction of the soil prevents gaseous exchange and water drainage.
b) Roots being severed or crushed.
c) Drainage being affected by alteration of levels and installation of trenches for services.
d) Physical damage to branches and trunks.
e) Poisoning of trees with contamination from fuel and oil leaks from machinery, run off from concrete mixers or other toxic materials used during construction.

The main consequences of the above in terms of damage are:

i) Compaction kills roots by preventing oxygen and water take-up.
ii) Severance can lead to pathogenic fungi invading the tree and in the worst cases, it can also lead to instability.
iii) Loss of vitality caused by the above can dramatically affect the life span of the tree.
iv) Damage to the crown can also lead to disease and instability in the worst cases.

## 5.0 Protection of the trees that are retained

5.1 BS 5837:2012 is intended to give recommendations to protect the trees during development and ensure their survival following the demolition or construction work. To achieve this there are two main considerations. The first is to protect the roots of the trees and the second to protect the upper parts of the trees, the trunk and branches.

5.2 The main tool to achieve the above is to create “Construction Exclusion Zones” (CEZ) around the trees. These are based on the “Root Protection Area” or RPA as calculated in BS 5837:2012. The RPAs for all the trees are included in the survey schedule. The RPA may be adjusted to consider existing ground constraints such as roads, buildings or walls. This will be done based on the surveyors’ experience and qualification on a tree by tree basis.

5.3 To achieve an effective “Construction Exclusion Zone” (CEZ) it is necessary to erect a protective barrier along the edge of the RPA’s. The details of this fencing are shown in Figure 2 or 3, which is included as an appendix (B) to this report. The barrier should be erected a minimum distance from each tree, this minimum distance is provided as a radius in the Survey Schedule and shown on the plan. It is essential that this barrier is well anchored into the ground to prevent it being moved. It is acceptable to use “Herras” fencing in concrete or rubber feet and appropriately back braced in areas where site circumstances and the associated risk of damaging incursion into the RPA are low.

5.4 The Tree Protective Fencing should be installed before any construction work takes place. This includes demolition, site clearance and drainage work.

5.5 Notices should be fixed to the fencing warning personnel not to enter. They should read “CONSTRUCTION EXCLUSION ZONE – NO ACCESS”. An example of this is attached in appendix (B).

5.6 In some circumstances, and only with agreement from the LPA, it may be necessary to work within the RPA. In these circumstances the barrier may need to be realigned and ground protection used even for access on foot. If vehicular access is required, then this will have to be specifically designed to prevent compaction and agreed in writing.

5.7 If the LPA agree to work within the RPA, then any excavation work would have to be done by hand and usually supervised by the Arboriculturalist. Drives or access roads will also require a specific Method Statement and include “No-Dig” construction methods.

5.8 Some operations such as the use of cranes for construction or demolition will need to be carefully organised and supervised to avoid accidental damage to the branches and stems of the retained trees. It may be advisable where damage is inevitable to carry out facilitation pruning to avoid initial conflict. This would have to be agreed by the Arboriculturalist and the LPA.

5.9 Trees should not be used to support notices and under no circumstances should nails, screws or bolts be driven into the trees. Likewise, trees should not be used to support cables or lights.

5.10 Care should be taken to avoid the discharge of any material that could contaminate the soil within 15 metres of any tree. This would include washings from cement mixers, fuel or oil storage etc. This distance may need to be extended if the ground slopes towards the tree.

## 6.0 Arboricultural Methods

6.1 The Arboriculturalist or the Local Authority Tree Officer should be consulted if there are any unforeseen issues in relation to any tree on site, including any unexpected work within the Root Protection Areas.

6.2 All tree work should be carried out by skilled professionals, and it is recommended that contractors are selected from the Approved List of Arboricultural Association Contractors. This can be obtained from www.trees.org.uk

6.3 All tree work should be carried out to the latest standards based on BS 3998: 2010 ‘Recommendations for Tree Work’.

## 7.0 Wildlife and Timing of Operations

7.1 Many animals including bats and birds are given special protection under the Wildlife and Countryside Act 1981(as amended) and the Countryside and Rights of Way Act 2001 amongst other legislation.

7.2 **Bats**. It is an offence to “intentionally or recklessly disturb a bat” or “damage, destroy or block the access to the resting place of any bat”. An assessment of trees on the site for “suitability for bats” is an essential part of the pre-planning stage. If bats are found or even reported to have used the trees for roosts, then it is essential that a specialist in this field is contacted for advice. Natural England should be contacted on 0300 060 3900 or through www.naturalengland.org.uk for details of suitable specialists. It may be that a European Protected Species Habitat Regulations Licence is required before work can continue. Following advice, it is usual that work to trees with potential for bat roosts is best done from late August to early October. March through to April is also suitable but there may be conflict with nesting birds. (see below)

7.3 **Birds**. It is an offence to disturb, injure or kill any bird whilst it is at or building a nest. This includes damage to or removal of the actual nest whilst it is in use or being built. Tree works that could lead to the above should therefore be avoided during the months of March through until August.

7.4 To avoid problems with either, it would be advisable to programme all necessary site clearance work and tree pruning from late August to the early October**.**

## 8.0 Planning Considerations

8.1 Full planning consent that includes any proposed tree works usually overrides the requirement to get specific permission, even for trees that are within a Conservation Area or protected by a Tree Preservation Order.

8.2 If work is to be carried out prior to planning consent being sought, then it may be necessary to apply for permission separately. In a Conservation Area it is a requirement to give Six Weeks Written Notice of any intended works. In the case of a TPO an application is required to the LPA on a 1APP form; in this case it may take 8-10 weeks before permission is given. It should be noted that permission is not required from the LPA to remove “Dead or Dangerous” trees although it is always best to inform the LPA of your intentions and supply suitable evidence to support your actions.

## 9.0 Arboricultural Impact Assessment

9.1 A total of 16 trees, 1 group and 1 woodland group were included in the survey. All trees are listed in the survey schedule and shown on plan THL-0868 attached to this report.

9.2 The proposed development is for a new entrance and driveway off Leek Road, and new agricultural unit within the field. The proposed development is shown on plan THL-0868-2.

9.3 The proposed new entrance will be constructed in the gap between the trees and will not require any tree removal. There are 3 trees that have been recommended for removal due to their poor condition and proximity to the highway, as well as the new driveway. These trees should be removed on the grounds of safety and have been highlighted with a dashed red outline on plan THL-0868-2.

9.4 In addition to the above tree removal, it was noted on site that other dead or dangerous trees are present adjacent to the highway. These trees are outside of the red line boundary and do not form part of the planning application, but it is recommended that they are removed on the grounds of safety. The trees are Elm trees located along the boundary fence line adjacent to the highway.

9.5 The proposed new agricultural unit will be located in the corner of the field as shown on plan THL-0868-2. The unit will be outside the RPA's of the woodland group, which will be protected throughout the development. To allow for the construction of the unit T16 will require removal. T16 is a category C Alder.

9.6 G1 is a group of predominantly self-set Silver Birch trees. Most of this group can be retained within the development as shown on plan THL-0868-2, but a few small saplings nearer to T16 may require removal to allow for the development.

9.7 All retained trees will require protection during the construction work to make sure that they are not damaged. This can be achieved by creating a Construction Exclusion Zone (CEZ), using barriers to exclude vehicles, personnel and materials, details of this are found in section 5 of this report.

9.8 The exact position of the Tree Protection Barriers should be discussed on site with the agreement of the LPA Tree Officer. It is essential that they are erected before any work starts on the site. Plan THL-0868-3 shows the suggested location for the barriers along with measurements to help with their installation and setup.

Tree Heritage Ltd

Ben Williams

Ben Williams
BSc (Hons) Arb. M.Arbor.A

**27/05/2020**

**Table 1 Cascade chart for tree quality assessment**

| Category and definition | Criteria (including subcategories where appropriate) | | | Identification on plan |
|---|---|---|---|---|
| **Trees unsuitable for retention** (see Note) | | | | |
| **Category U**<br>Those in such a condition that they cannot realistically be retained as living trees in the context of the current land use for longer than 10 years | • Trees that have a serious, irremediable, structural defect, such that their early loss is expected due to collapse, including those that will become unviable after removal of other category U trees (e.g. where, for whatever reason, the loss of companion shelter cannot be mitigated by pruning)<br>• Trees that are dead or are showing signs of significant, immediate, and irreversible overall decline<br>• Trees infected with pathogens of significance to the health and/or safety of other trees nearby, or very low quality trees suppressing adjacent trees of better quality<br>*NOTE Category U trees can have existing or potential conservation value which it might be desirable to preserve; see **4.5.7**.* | | | Red |
| | **1 Mainly arboricultural qualities** | **2 Mainly landscape qualities** | **3 Mainly cultural values, including conservation** | |
| **Trees to be considered for retention** | | | | |
| **Category A**<br>**Trees of high quality** with an estimated remaining life expectancy of at least 40 years | Trees that are particularly good examples of their species, especially if rare or unusual; or those that are essential components of groups or formal or semi-formal arboricultural features (e.g. the dominant and/or principal trees within an avenue) | Trees, groups or woodlands of particular visual importance as arboricultural and/or landscape features | Trees, groups or woodlands of significant conservation, historical, commemorative or other value (e.g. veteran trees or wood-pasture) | Light Green |
| **Category B**<br>**Trees of moderate quality** with an estimated remaining life expectancy of at least 20 years | Trees that might be included in category A, but are downgraded because of impaired condition (e.g. presence of significant though remediable defects, including unsympathetic past management and storm damage), such that they are unlikely to be suitable for retention for beyond 40 years; or trees lacking the special quality necessary to merit the category A designation | Trees present in numbers, usually growing as groups or woodlands, such that they attract a higher collective rating than they might as individuals; or trees occurring as collectives but situated so as to make little visual contribution to the wider locality | Trees with material conservation or other cultural value | Mid Blue |
| **Category C**<br>**Trees of low quality** with an estimated remaining life expectancy of at least 10 years, or young trees with a stem diameter below 150 mm | Unremarkable trees of very limited merit or such impaired condition that they do not qualify in higher categories | Trees present in groups or woodlands, but without this conferring on them significantly greater collective landscape value; and/or trees offering low or only temporary/transient landscape benefits | Trees with no material conservation or other cultural value | Grey |

**Tree Heritage Ltd, Unit 1 Sneyd Mill, Sneyd St, Leek, Staffs, ST13 5HP**
**T: 01538 384019 E: info@treeheritage.co.uk**

# APPENDIX A: TREE SURVEY SCHEDULE

**KEY:**

| Measurements | Life Stage | Physiological Condition | Category Grading | Symbols |
|---|---|---|---|---|
| Height - *Metres*<br>Stem Diameter - *Millimetres at 1.5m above ground level*<br>Branch Spread - *Metres (North, South, East and West)*<br>Crown Clearance - *Metres*<br>RPA Radius - *Metres*<br>Estimated Remaining Contribution - *Years*<br>FSB - First Significant Branch - *Metres* | Y - *Young*<br>SM - *Semi-Mature*<br>EM - *Early Mature*<br>M - *Mature*<br>OM - *Over-Mature*<br>V - *Veteran* | G - *Good*<br>F - *Fair*<br>P - *Poor*<br>D - *Dead* | A - *High (green)*<br>B - *Moderate (blue)*<br>C - *Low (grey)*<br>*U - Poor/Trees for removal (red)*<br>**Sub-Categories:**<br>1 - *Mainly Arboricultural value*<br>2 - *Mainly Landscape value*<br>3 - *Mainly Cultural value* | < - *Less than*<br>~ - *Approximately*<br>> - *Greater than* |
| RPA - *Root protection area (equivalent to a circle with a radius 12x the stem diameter measured at 1.5m above ground level)* | | | | |

**Site: Land off Leek Road, Wetley Rocks**
**Surveyed by: Ben Williams BSc (Hons) Arb. M.Arbor.A**
**Date: 21/05/2020**

**Tree Heritage Ltd, Unit 1 Sneyd Mill, Sneyd St, Leek, Staffs, ST13 5HP**
**T: 01538 384019 E: info@treeheritage.co.uk**

| Tree Ref. | Species | Height | Stem Diameter | Branch Spread | | | | Crown Clearance | FSB Height + Direction | Life Stage | Phys. Condition | Structural Condition | Recommendations | Estimated Remaining Contribution | Category Grading | RPA Radius |
|---|---|---|---|---|---|---|---|---|---|---|---|---|---|---|---|---|
| | | | | N | S | E | W | | | | | | | | | |
| T1 | Betula pendula (Silver Birch) | 8 | 280 | 1 | 3 | 3 | 3 | 4 | 2.5(E) | M | Fair | Decay present at base. Cavity at base. | Remove tree. | <10 | U | 3.36 |
| T2 | Betula pendula (Silver Birch) | 10 | 190 | 3 | 2 | 1 | 4 | 4 | 4(W) | M | Dead | Dead. Dangerous. | Fell tree on the grounds of safety. | <10 | U | 2.28 |
| T3 | Fagus sylvatica (Beech) | 15 | 500 | 6 | 6 | 6 | 7 | 1 | 2.5(N) | M | Good | Broken branch/es in crown. Minor deadwood in crown. | No work required. | 20+ | B1 | 6 |
| T4 | Betula pendula (Silver Birch) | 12 | 310 | 1 | 4 | 3 | 3 | 3 | 2.5(S) | M | Fair | Minor deadwood in crown. Crown distorted due to group pressure. | No work required. | 10+ | C1 | 3.72 |
| T5 | Betula pendula (Silver Birch) | 14 | 340 | 3 | 4 | 5 | 4 | 6 | 6(S) | M | Fair | Major deadwood in crown. | Remove major deadwood. | 10+ | C1 | 4.08 |
| T6 | Quercus robur (Common Oak) | 15 | 430 | 6 | 4 | 5 | 5 | 2 | 2.5(S) | M | Fair | Major deadwood in crown. | Remove major deadwood. | 20+ | B1 | 5.16 |
| T7 | Betula pendula (Silver Birch) | 6 | 300 | 2 | 2 | 2 | 2 | 3 | 3(E) | M | Dead | Dead. | Fell tree on the grounds of safety. | <10 | U | 3.6 |
| T8 | Alnus glutinosa (Common Alder) | 10 | 390,320 | 5 | 5 | 5 | 4 | 2 | 2(E) | M | Good | Minor deadwood in crown. | No work required. | 20+ | B1 | 6.05 |
| T9 | Betula pendula (Silver Birch) | 12 | 220 | 4 | 4 | 4 | 4 | 4 | 5(NE) | M | Good | Minor deadwood in crown. | No work required. | 10+ | C1 | 2.64 |
| T10 | Betula pendula (Silver Birch) | 12 | 270 | 4 | 4.5 | 4 | 4 | 3 | 3(SW) | M | Fair | Decay present at base. Dieback in crown. Major deadwood in crown. | Remove major deadwood. | 10+ | C1 | 3.24 |

**Site: Land off Leek Road, Wetley Rocks**
**Surveyed by: Ben Williams BSc (Hons) Arb. M.Arbor.A**
**Date: 21/05/2020**

**Tree Heritage Ltd, Unit 1 Sneyd Mill, Sneyd St, Leek, Staffs, ST13 5HP**
**T: 01538 384019 E: info@treeheritage.co.uk**

| Tree Ref. | Species | Height | Stem Diameter | Branch Spread | | | | Crown Clearance | FSB Height + Direction | Life Stage | Phys. Condition | Structural Condition | Recommendations | Estimated Remaining Contribution | Category Grading | RPA Radius |
|---|---|---|---|---|---|---|---|---|---|---|---|---|---|---|---|---|
| | | | | N | S | E | W | | | | | | | | | |
| T11 | Quercus robur (Common Oak) | 10 | 320 | 5 | 3 | 7 | 6 | 1.5 | 2(SE) | M | Good | Poor shape/form. Major deadwood in crown. Crown distorted due to group pressure. | Remove major deadwood. | 20+ | B1 | 3.84 |
| T12 | Betula pendula (Silver Birch) | 13 | 210 | 5 | 3 | 3 | 5 | 6 | 5(W) | M | Good | | No work required. | 20+ | B1 | 2.52 |
| T13 | Betula pendula (Silver Birch) | 7 | 160 | 3 | 0 | 0 | 2 | 5 | 5(W) | M | Poor | Decay present at base. Decay present in stem. Major bark wounding on stem. Storm damage in crown. | Fell tree on the grounds of safety. | <10 | U | 1.92 |
| T14 | Betula pendula (Silver Birch) | 12 | 310 | 3 | 3 | 5 | 3 | 4 | 2(N) | M | Good | Decay present in stem. Cavity on stem. | No work required. | 10+ | C1 | 3.72 |
| T15 | Betula pendula (Silver Birch) | 12 | 280 | 4.5 | 4 | 4.5 | 4 | 4 | 4(SE) | M | Good | Decay present at base. | No work required. | 20+ | B1 | 3.36 |
| T16 | Alnus glutinosa (Common Alder) | 14 | 240,230, 240 | 4 | 4 | 5 | 4 | 2 | 2(E) | M | Fair | Multiple stems at ground level. Minor deadwood in crown. | Remove tree for development. | 10+ | C1 | 4.92 |
| G1 | Betula pendula (Silver Birch) | 10 | 150 | 2.5 | 2.5 | 2.5 | 2.5 | 1.5 | 1(N) | M | Fair | | No work required. | 10+ | C1 | 1.8 |

**Site: Land off Leek Road, Wetley Rocks**
**Surveyed by: Ben Williams BSc (Hons) Arb. M.Arbor.A**
**Date: 21/05/2020**

**Tree Heritage Ltd, Unit 1 Sneyd Mill, Sneyd St, Leek, Staffs, ST13 5HP**
**T: 01538 384019 E: info@treeheritage.co.uk**

| Tree Ref. | Species | Height | Stem Diameter | Branch Spread | | | | Crown Clearance | FSB Height + Direction | Life Stage | Phys. Condition | Structural Condition | Recommendations | Estimated Remaining Contribution | Category Grading | RPA Radius |
|---|---|---|---|---|---|---|---|---|---|---|---|---|---|---|---|---|
| | | | | N | S | E | W | | | | | | | | | |
| W1 | Betula pendula (Silver Birch),Quercus robur (Common Oak),Acer pseudoplatanus (Sycamore),Alnus glutinosa (Common Alder),Fagus sylvatica (Beech) | 15 | 350 | 4 | 4 | 4 | 4 | 2 | 2(E) | M | Good | | No work required. | 40+ | A2 | 4.2 |

## Appendix B i

Figure 2 – Default specification for protective barrier

Figure 2 **Default specification for protective barrier**

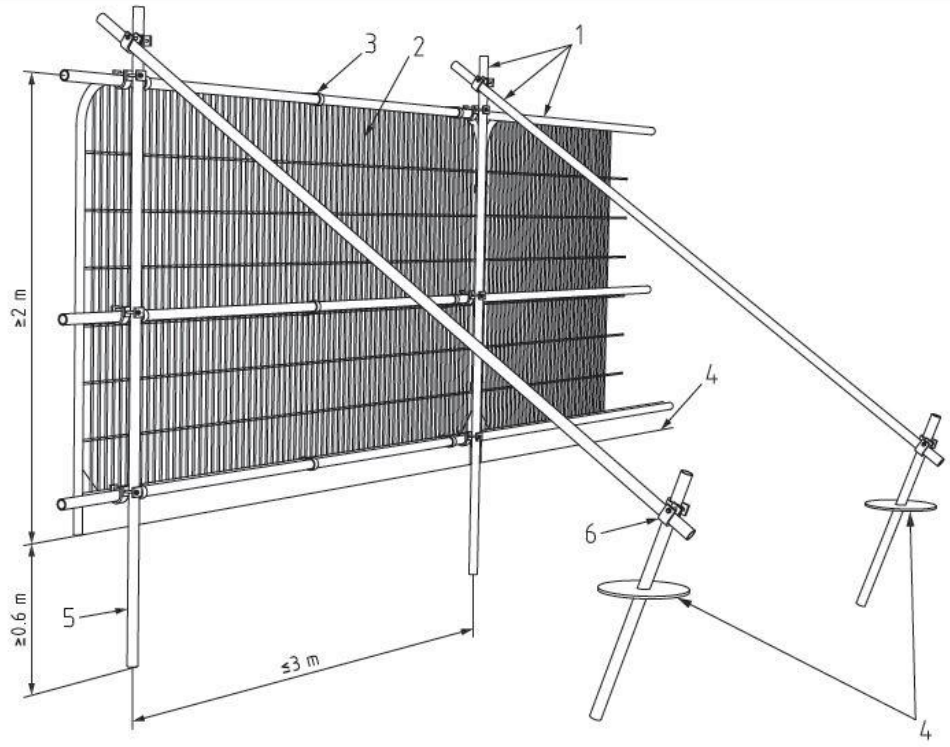


**Key**

1 Standard scaffold poles
2 Heavy gauge 2 m tall galvanized tube and welded mesh infill panels
3 Panels secured to uprights and cross-members with wire ties
4 Ground level
5 Uprights driven into the ground until secure (minimum depth 0.6 m)
6 Standard scaffold clamps



**PROTECTIVE FENCING. THIS FENCING MUST BE MAINTAINED IN ACCORDANCE WITH THE APPROVED PLANS AND DRAWINGS FOR THIS DEVELOPMENT.**



**TREE PROTECTION AREA**
**KEEP OUT !**

**TREES ENCLOSED BY THIS FENCE ARE PROTECTED BY PLANNING CONDITIONS**

**ANY INCURSION INTO THE PROTECTED AREA MUST BE WITH THE WRITTEN PERMISSION OF THE LOCAL PLANNING AUTHORITY**

0 2 4 6 8 10m
1:200

N

T15-Silver Birch
T14-Silver Birch
T13-Silver Birch
T12-Silver Birch
T11-Common Oak
T10-Silver Birch
T8-Common Alder
T9-Silver Birch
T7-Silver Birch
T6-Common Oak
T5-Silver Birch
T3-Beech
T2-Silver Birch
T4-Silver Birch
T1-Silver Birch
T16-Common Alder
G1-Silver Birch
G1-Silver Birch
G1-Silver Birch
G1-Silver Birch
G1-Silver Birch
W1-Silver Birch, Common Oak, Sycamore, Common Alder, Beech
W1-Silver Birch, Common Oak, Sycamore, Common Alder, Beech
W1-Silver Birch, Common Oak, Sycamore, Common Alder, Beech
Stud-proof fencing
LEEK ROAD

## Notes:

1. Contractors are advised to check all dimensions against the tree schedule. Tree canopies are symbolic only and are representative of the average spread; this may not represent the true outline. Note that the tree stem may not sit centrally to canopy. Tree stems are symbolic only and are representative of the tree category; this does not represent the stem diameter - see schedule for details.
2. The original of this drawing was produced in colour - a monochrome copy should not be relied upon.

| Rev: | Date: | Status/Amendments: | By: |
|---|---|---|---|

Key:

- Category A Tree / Group
- Category B Tree / Group
- Category C Tree / Group
- Category U Tree / Group
- Branch Spread
- Tree to be Removed
- Root Protection Area (RPA)
- First Significant Branch Direction
- Tree Protection Barrier
- Special Measures
- Tree Shadow


GROWING SINCE ● 1982
TREE HERITAGE
Tree Heritage Ltd, Unit 1 Sneyd Mill, Sneyd Street, Leek, Staffordshire, ST13 5HP
Telephone: 01538 384019
treeheritage.co.uk ● info@treeheritage.co.uk


Client:
Joe Stonier

Project:
Land off Leek Road, Wetley Rocks

Drawing Title:
Tree Constraints Plan

| Scale: | Paper Size: |
|---|---|
| 1:200 | A1 |
| Drawing Number: THL-0868 | Date Created: 22/05/2020 |

0 2 4 6 8 10m
1:200

N

Visibility splays 215m radius from a position 2.4M from the back edge of the carridgeway.

New Tree Planting. Holy, Silver Birch and Yew mix.

Woodland Rhododendrons

Stockpoof Ranch Fencing

Proposed Access Point Constructed to County Highways Standards and Specifications. Visibility Splays 2.4m from the Site Boundary to be 215m in both directions

Existing Levels

Proposed Levels

FROM WETLEY ROCKS

HIGHFIELDS FARM

LEEK ROAD

T15-Silver Birch
T14-Silver Birch
T13-Silver Birch
T12-Silver Birch
T11-Common Oak
T10-Silver Birch
T9-Silver Birch
T8-Common Alder
T7-Silver Birch
T6-Common Oak
T5-Silver Birch
T4-Silver Birch
T3-Beech
T2-Silver Birch
T1-Silver Birch
T16-Common Alder

11600
4000
2400

Soakaways formed to suite Site Conditions

W1-Silver Birch, Common Oak, Sycamore, Common Alder, Beech

W1-Silver Birch, Common Oak, Sycamore, Common Alder, Beech

W1-Silver Birch, Common Oak, Sycamore, Common Alder, Beech

G1-Silver Birch
G1-Silver Birch
G1-Silver Birch
G1-Silver Birch
G1-Silver Birch

*Notes:*

1. Contractors are advised to check all dimensions against the tree schedule. Tree canopies are symbolic only and are representative of the average spread; this may not represent the true outline. Note that the tree stem may not sit centrally to canopy. Tree stems are symbolic only and are representative of the tree category; this does not represent the stem diameter - see schedule for details.
2. The original of this drawing was produced in colour - a monochrome copy should not be relied upon.

| Rev: | Date: | Status/Amendments: | By: |
|---|---|---|---|

*Key:*

- Category A Tree / Group
- Category B Tree / Group
- Category C Tree / Group
- Category U Tree / Group
- Branch Spread
- Tree to be Removed
- Root Protection Area (RPA)
- First Significant Branch Direction
- Tree Protection Barrier
- Special Measures
- Tree Shadow


GROWING SINCE 1982
TREE HERITAGE
Tree Heritage Ltd, Unit 1 Sneyd Mill, Sneyd Street, Leek, Staffordshire, ST13 5HP
Telephone: 01538 384019
treeheritage.co.uk info@treeheritage.co.uk


*Client:*
Joe Stonier

*Project:*
Land off Leek Road, Wetley Rocks

*Drawing Title:*
Arboricultural Impact Assessment

| *Scale:* | *Paper Size:* |
|---|---|
| 1:200 | A1 |
| *Drawing Number:* | *Date Created:* |
| THL-0868-2 | 26/05/2020 |

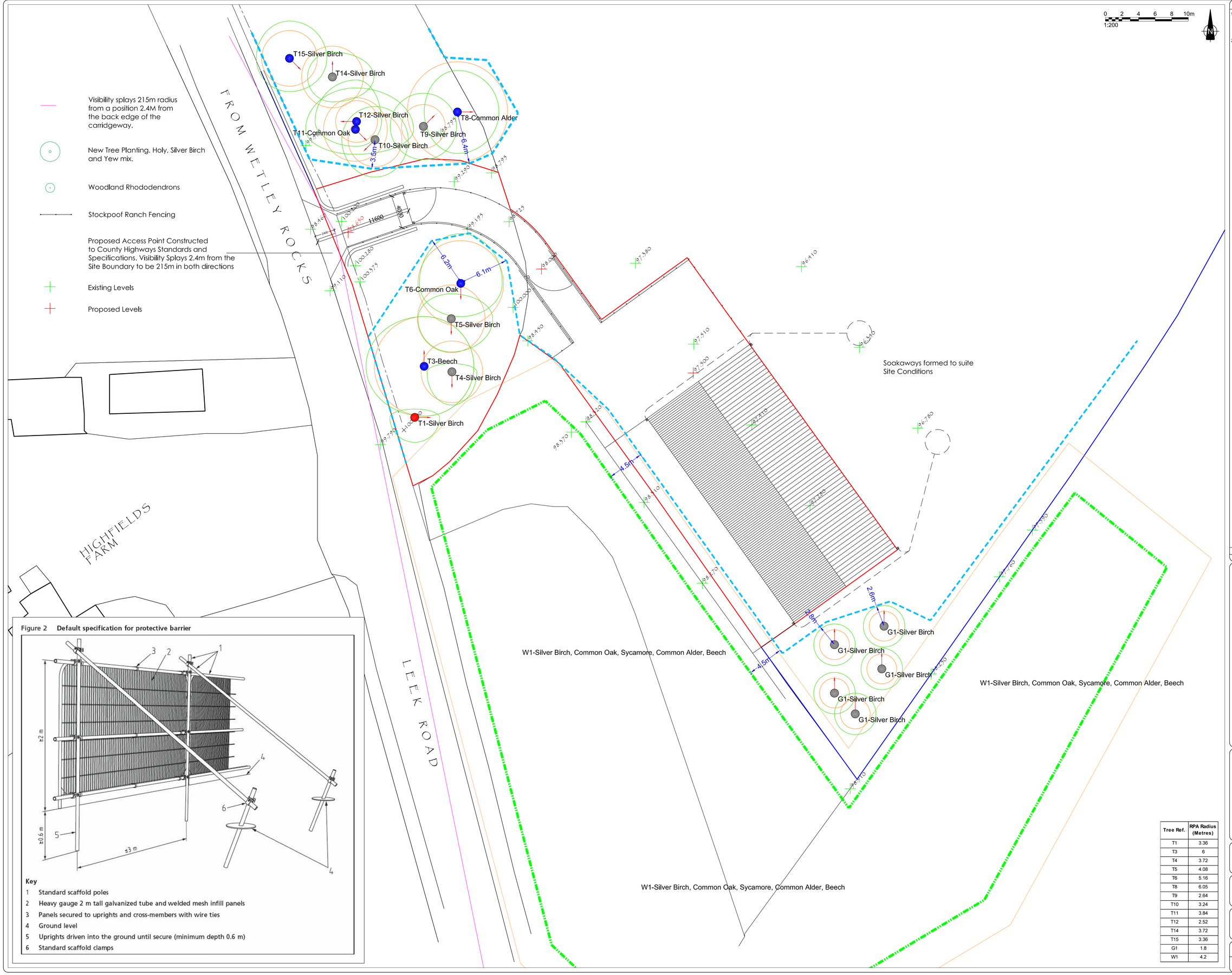


Figure 2 Default specification for protective barrier




**Key**

1 Standard scaffold poles
2 Heavy gauge 2 m tall galvanized tube and welded mesh infill panels
3 Panels secured to uprights and cross-members with wire ties
4 Ground level
5 Uprights driven into the ground until secure (minimum depth 0.6 m)
6 Standard scaffold clamps

| Tree Ref. | RPA Radius (Metres) |
|---|---|
| T1 | 3.36 |
| T3 | 6 |
| T4 | 3.72 |
| T5 | 4.08 |
| T6 | 5.16 |
| T8 | 6.05 |
| T9 | 2.64 |
| T10 | 3.24 |
| T11 | 3.84 |
| T12 | 2.52 |
| T14 | 3.72 |
| T15 | 3.36 |
| G1 | 1.8 |
| W1 | 4.2 |

*Notes:*

1. Contractors are advised to check all dimensions against the tree schedule. Tree canopies are symbolic only and are representative of the average spread; this may not represent the true outline. Note that the tree stem may not sit centrally to canopy. Tree stems are symbolic only and are representative of the tree category; this does not represent the stem diameter - see schedule for details.
2. The original of this drawing was produced in colour - a monochrome copy should not be relied upon.

| Rev: | Date: | Status/Amendments: | By: |
|---|---|---|---|

*Key:*

- Category A Tree / Group
- Category B Tree / Group
- Category C Tree / Group
- Category U Tree / Group
- Branch Spread
- Tree to be Removed
- Root Protection Area (RPA)
- First Significant Branch Direction
- Tree Protection Barrier
- Special Measures
- Tree Shadow


GROWING SINCE ● 1982
TREE HERITAGE
Tree Heritage Ltd, Unit 1 Sneyd Mill, Sneyd Street, Leek, Staffordshire, ST13 5HP
Telephone: 01538 384019
treeheritage.co.uk ● info@treeheritage.co.uk


*Client:* Joe Stonier

*Project:* Land off Leek Road, Wetley Rocks

*Drawing Title:* Tree Protection Plan

| Scale: | Paper Size: |
|---|---|
| 1:200 | A1 |
| Drawing Number: THL-0868-3 | Date Created: 26/05/2020 |