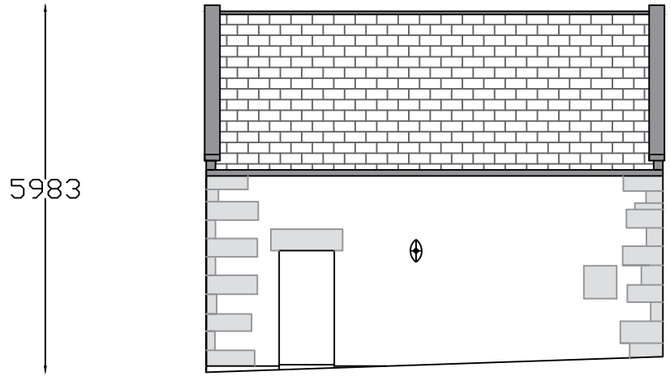

NORTH WEST ELEVATION

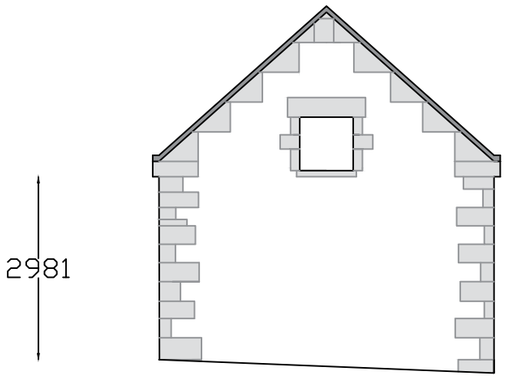

SOUTH WEST ELEVATION

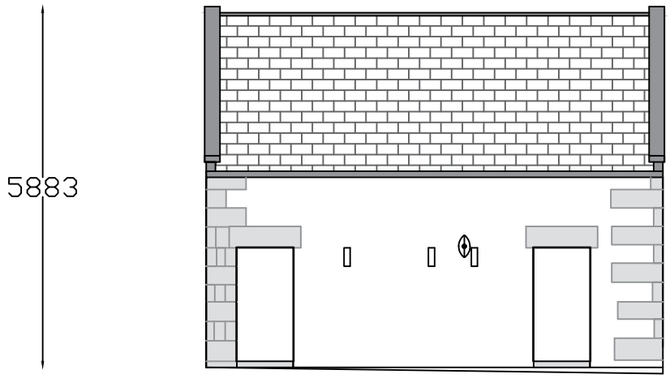

SOUTH EAST ELEVATION

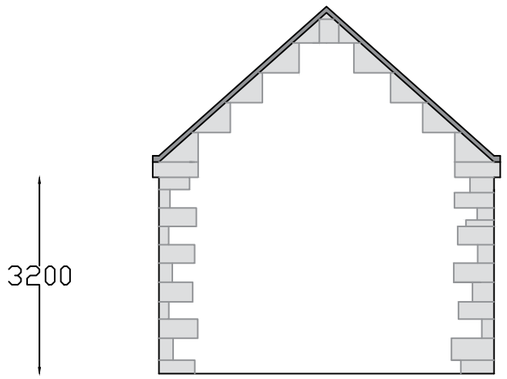

NORTH EAST ELEVATION

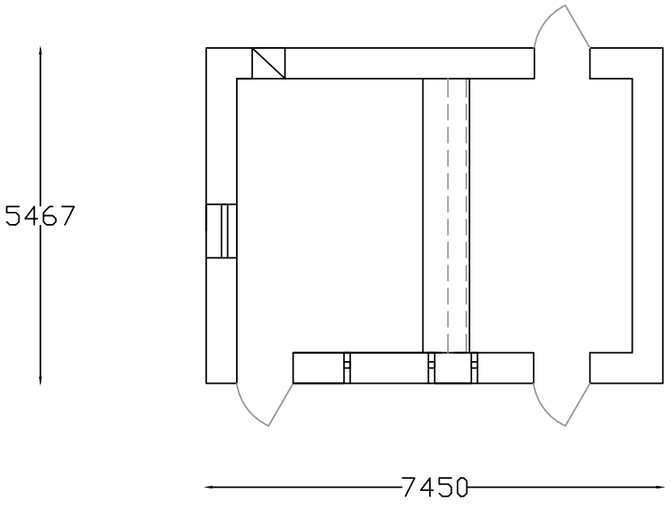

FLOORPLAN



GEA - 40.73 SQM
GIA - 28.81 SQM

AndrewLarge surveyors LTD

BARN ADJOINING LEEK ROAD, UPPER MAYFIELD ASHBOURNE
EXISTING ELEVATIONS AND FLOOR PLAN SCALE - 1:100@A3