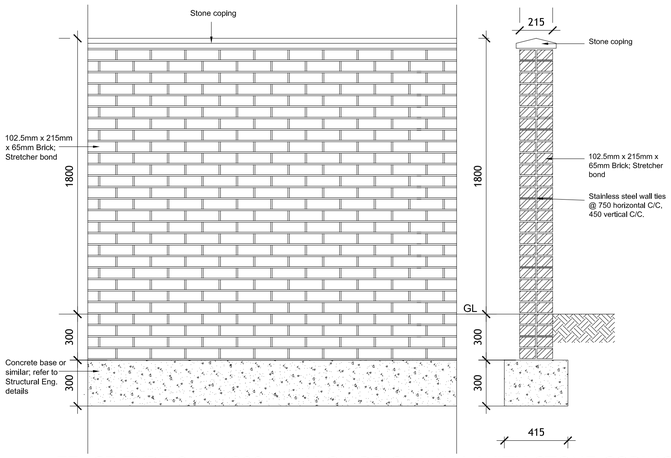

FENCE TYPE 01 - 1800mm HIGH BRICK WALL WITH STONE COPING
NOTE: Brick wall to be checked by structural engineer before construction.



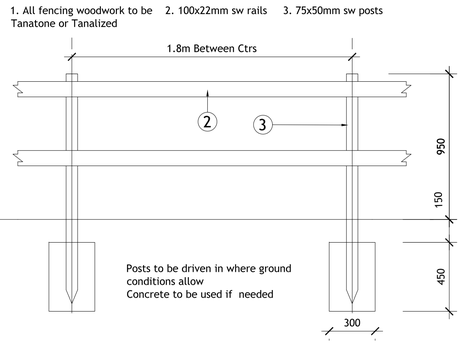

FENCE TYPE 06 - 900mm RANCH STYLE TIMBER FENCE

BOUNDARY KEY:

- TYPE 01 1800MM BRICK WALL (TO MATCH THE DWELLING BRICK TYPE) WITH PLANTING TO THE FRONT OF IT
- TYPE 02 1800MM CLOSE BOARDED FENCE
- TYPE 03 600MM NEW HEDGEROWS (IN ACCORDANCE WITH THE DETAILS SHOWN ON THE APPROVED LANDSCAPING PLAN)
- TYPE 04 1200MM HOOP TOP METAL RAILINGS
- TYPE 05 450MM KNEE HIGH RAIL
- TYPE 06 900MM HIGH RANCH STYLE TIMBER FENCE
- VISIBILITY SPLAY
- LANDSCAPE BUFFER ZONE

SURFACING KEY:

- TARMAC (ROADS)
- BLOCK PAVING - MARSHALLS BRINDLE TEGULA (ROADS)
- TARMAC (PAVEMENT)
- TARMAC (PARKING SPACES)
- CONCRETE PAVING SLABS (FOOTPATHS)
- CONCRETE PAVING SLABS (BIN COLLECTION AREA)
- TACTILE PAVING (CROSSINGS)
- RUMBLE STRIP (SETTS OR SIMILAR)

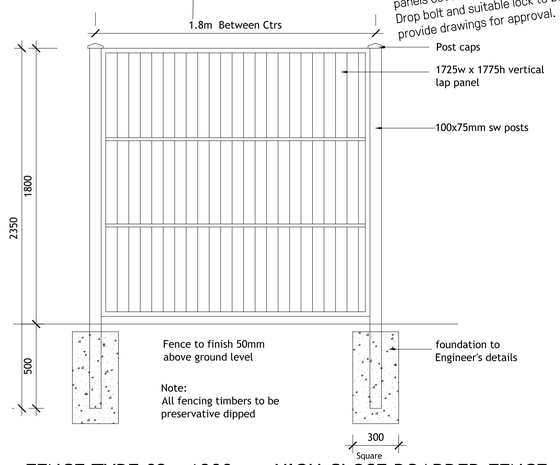

FENCE TYPE 02 - 1800mm HIGH CLOSE BOARDED FENCE

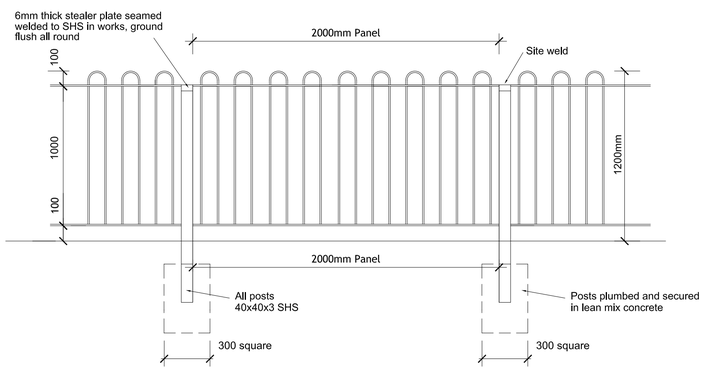

FENCE TYPE 04 - 1200mm HIGH METAL LOOP TOP RAILING

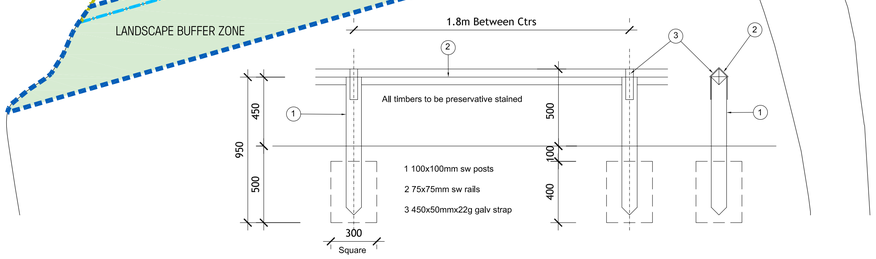

FENCE TYPE 05 - 450mm KNEE HIGH RAIL

PLANNING

Revision	Date	By	Chkd
J Fencing and gates added to the path for access and maintenance of SUDS area;	17.05.19	NV	--
K Drawing renamed to Boundary Treatment and Surfacing and surfacing treatment added all as per client's instructions;	24.05.19	NV	--
L Type 01 boundary colour amended and stone coping added, knee rail type 05 added, road surfaces revised, all as per planners instructions;	13.08.19	NV	--
M Fencing around SUDs revised from type 04 to type 02 and shared surface changed from tarmac to block paving, all as per planners instructions;	28.10.19	NV	--
N Red Site boundary and green buffer boundary removed as per client's instructions via email dated 14.11.2019;	14.11.19	NV	--
O Block paving for shared surfaces and private drives named and rumble strip added as per planners instructions via email dated 27/11/2019; Boundary Treatment amended in line with changes to Site Layout Plan;	17.01.20	NV	--
P Boundary Treatment revised and Type 06 added as per client's instructions via email dated 20/01/2020;	20.01.20	NV	--
Q Boundary Treatment revised as per client's instructions via email dated 10/02/2020;	11.02.20	NV	--

CDM Notes

Notes
— Copyright in this drawing remains the property of BM3 Architecture Limited.
— Contractors and consultants are to advise BM3 Architecture Limited of any discrepancies.

Project	ASHBOURNE ROAD CHEADLE STOKE-ON-TRENT
Drawing	BOUNDARY TREATMENTS AND SURFACING
Client	Keepmoat HOMES. DELIVERED.

Scale	Dated	Job No.	Drawing No.	Drawn by	Checked	CiSfb Element	Revision
1:20.500@A1	30.06.17	70160	D04	NV	--	PLANNING	Q

Birmingham Office 28 Pickford Street, Digbeth, Birmingham, B5 5QH T. 0121 633 0000 F. 0121 633 0300 E. design@bm3.co.uk