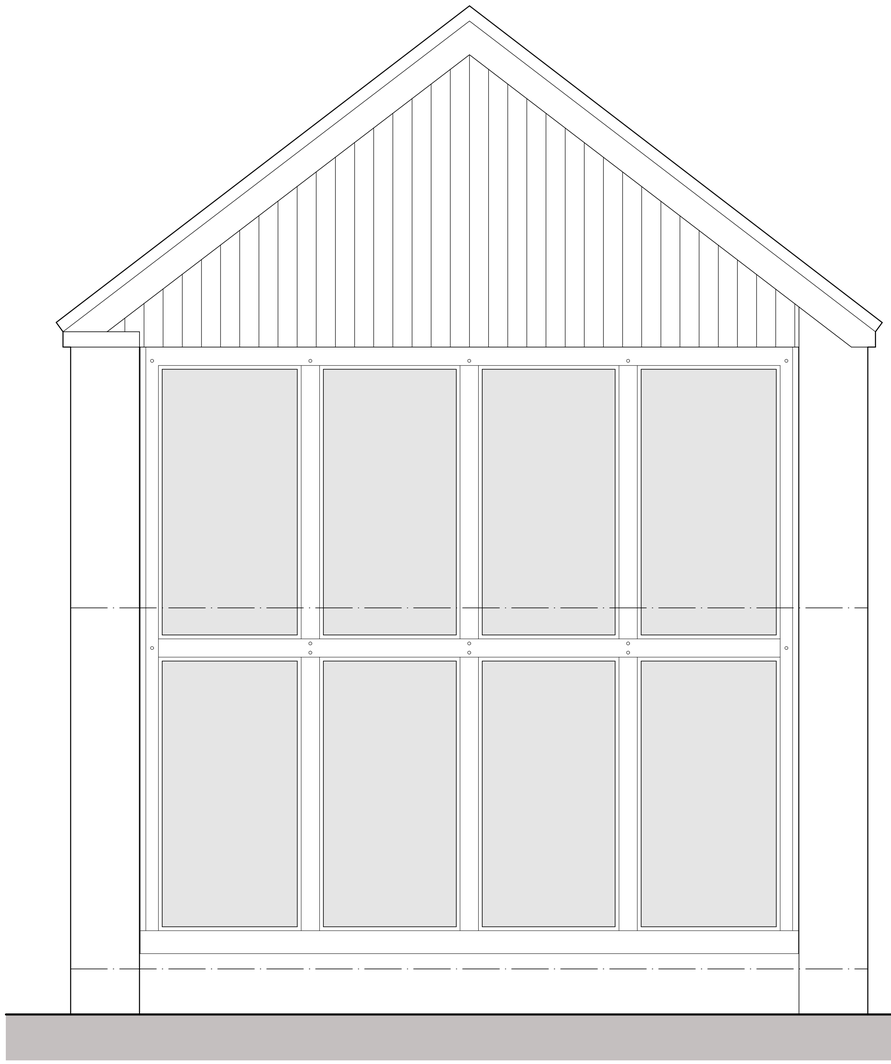

EXISTING + PROPOSED ELEVATION
SOUTH FACING GABLE END WINDOW

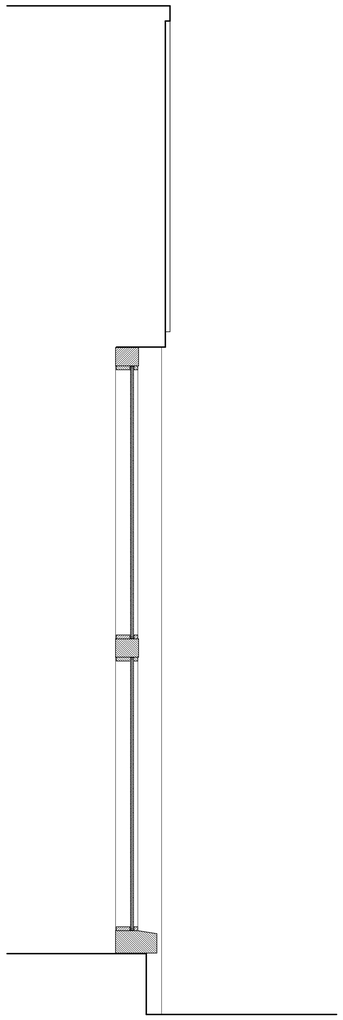

EXISTING SECTION

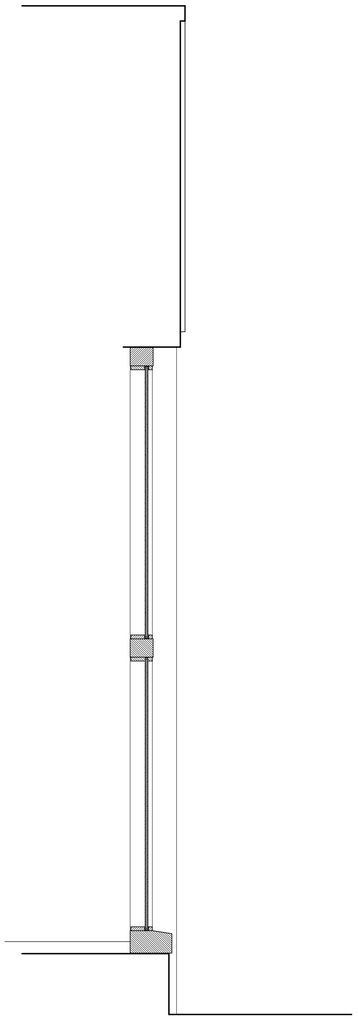

PROPOSED SECTION

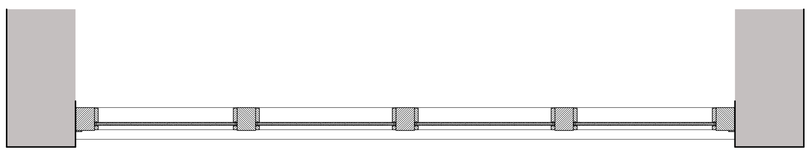

EXISTING CONDITIONS - PLAN
SOUTH FACING GABLE END WINDOW

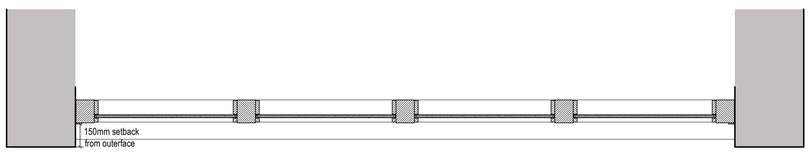

PROPOSED - PLAN
SOUTH FACING GABLE END WINDOW

NOTES -
All sizes shall be measured on site by the manufacturer.
Check on site prior to commencement.
These details are to form part of the planning conditions for drawing ref: 2016-2167-07
(always refer to the latest amended drawing).

WINDOWS
(max 'U' value 2.0W/m²K)
Shall be timber with a natural preservative finish.
Windows to comply with the requirements of PAS 24:2012 enhanced security performance and to have a Secured by Design licence.
All double glazed to domestic rooms utilising low-E glass.
Manufacturer's certified 'U' values must be obtained and passed onto L.A. Building Inspector for approval.
Ventilation openings shall exceed 1/20th floor area of the room served and be fitted with draught stripping.
Provide 10000mm² adjustable trickle vents to all habitable and bed rooms; 5000mm² adjustable trickle vents to kitchens, laundries and sanitary accommodation.
Note - Bedroom windows at upper floor levels are to include an opening casement exceeding 0.33m² in area and to give minimum clear open aperture of 450mm wide x 750mm high.
The bottom edge of this opening must be between 800mm and 1100mm from the floor.
Silicone mastic sealant shall be applied internally and externally around all openings.
Window frames to be set 150mm from the external face of masonry.



scale bar @ 1:20

Mr D. Salt

PROPOSED DISCHARGE OF CONDITIONS,
CALTON MOOR HOUSE,
SWINSCOE, NR ASHBOURNE,
STAFFS,
DE6 2BU
PLANNING CONDITIONS
JOINERY DETAILS - SHEET 2

Date	Sheet	Scale
FEBRUARY 2020	A1	1:20
Dwg No.	Rev.	Drawn
2016-2167-09	-	NAW

SAMMONS Architectural LIMITED
Chartered Institute of Architectural Technologists Registered Practice
10 Cawdry Buildings, Fountain Street, Leek. ST13 6JP
Telephone: 01538 386002
E-mail: info@sammonsltd.co.uk
Web: www.sammonsltd.co.uk

This drawing is copyright.
All dimensions must be checked prior to commencement.