This drawing is the copyright of Rhodes & Partners and must not be copied or passed to a third party without consent of the company.

Construction Notes:

1. General Notes:

1.1. This drawing to be read in conjunction with all relevant Architect's, Engineer's and Specialist's drawings and specifications. Work to be carried out in accordance with current good practice, Building Regulations and subsequent amendments, the project specification, relevant British Standards and codes of practice. Materials and components to be suitable for their intended use.
For setting out refer to Architects drawings.

2. Formation Preparation Notes:

2.1. Immediately prior to laying of the blinding or carriageway materials, the formation shall be prepared as follows:
All surfaces shall be cleaned and any wet material, mud, slurry, unsound or unstable material removed.
The surface shall be brought up to the formation level given on the approved drawings by the addition of any fill or by grading-off high spots.
The surface shall be regulated by grading to within a tolerance of +20mm to -30mm of true level.
The formation shall be finished by rolling 4 complete passes of a smooth-wheeled roller having a mass per metre width of at least 5000kg, or a vibratory roller having a mass per metre width of 3000kg.

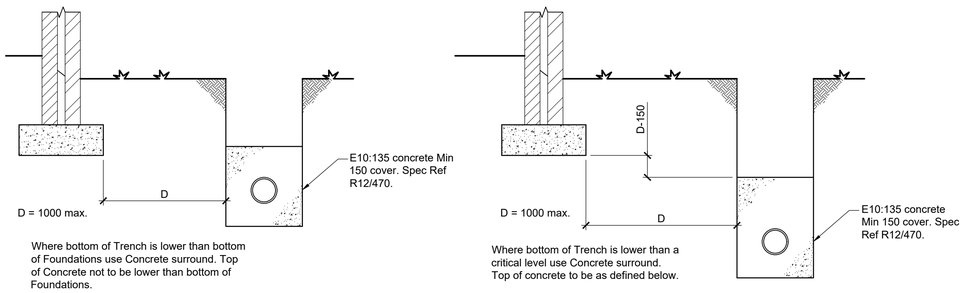


Where bottom of Trench is lower than bottom of Foundations use Concrete surround. Top of Concrete not to be lower than bottom of Foundations.

Where bottom of Trench is lower than a critical level use Concrete surround. Top of concrete to be as defined below.

## Pipes Near Foundations
[Scale 1:20]

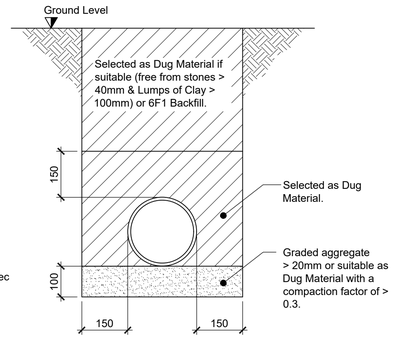


## Drain Trench Not Subjected To Traffic
(Bedding Class N)
[Scale 1:10]

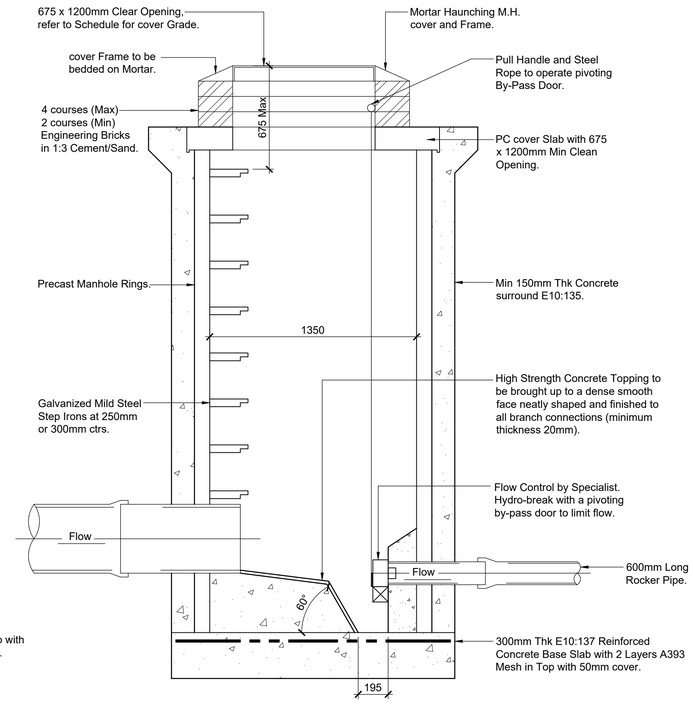


## New Hydro-Brake Chamber
[Scale 1:20]

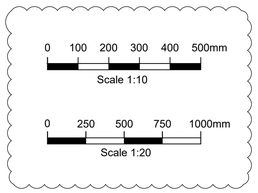


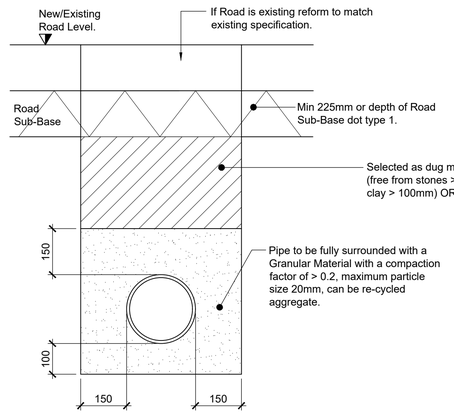


## Drain Trench Subjected to Traffic
(Bedding Class S)
[Scale 1:10 @ A1]

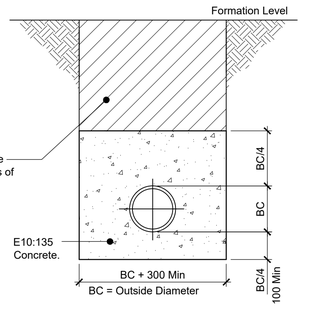


## Concrete surround Under Roads Less Than 1200mm Cover & Non-Trafficked Less Than 900mm Cover.
[Scale 1:10 @ A1]

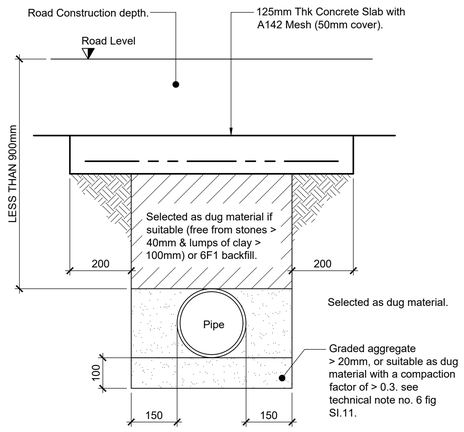


## Paving Slab Under Roads Less Than 1200mm Cover & Non-Trafficked Less Than 900mm Cover.
[Scale 1:10]

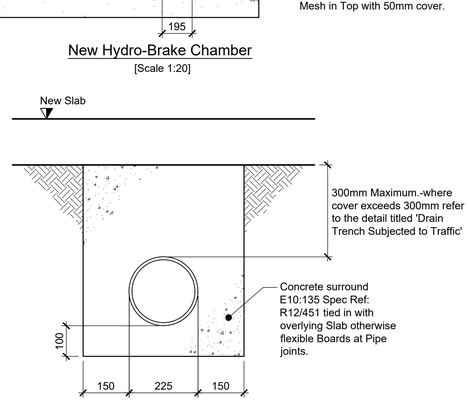


## Pipes Under Slabs
[Scale 1:10]

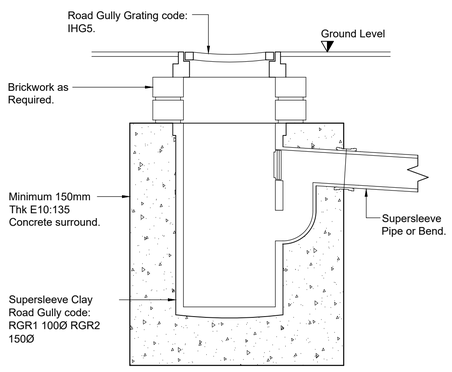


## Road Gulley
(300Ø x 600Dp)
[Scale 1:10]

Note
Fill selected from Excavated Material should be readily compact-able, free from Timber, frozen Material, Vegetable and Foreign Matter & exclude hard lumps of Clay retained on a 100mm sieve & Stones retained on a 40mm sieve.

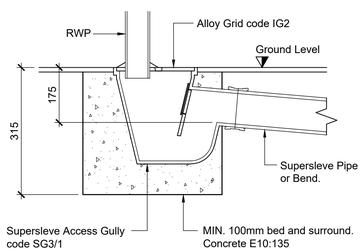


## RWP Detail
[Scale 1:10]

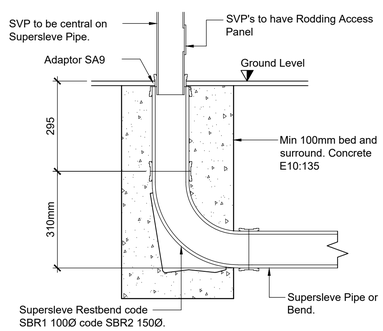


## Soil Vent Pipe
[Scale 1:10]

Note-
The depth of the Gully can be increased by up to 300mm by fitting a 225mm Coupling code VC1/3 and a 300mm High Raising Piece code SIC3/1 between the Frame and the Gully Body.

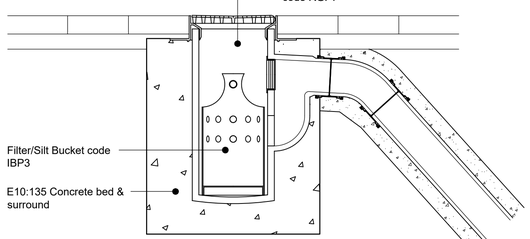


## Yard Gully Connection Detail
[Scale 1:10]

| Rev | Description | By | Chkd | Date |
|---|---|---|---|---|
| P2 | Scale bar added and "do not scale" annotations removed as requested | AR | GL | 09/03/2020 |
| P1 | Preliminary Issue | AR | GL | 17/02/2020 |

Drawing Status: PRELIMINARY

Rhodes &partners
Consulting Civil and Structural Engineers
The Lodge, Compstall Mills Estate, Compstall, Stockport SK6 5HN
t: 0161 427 8388 e: office@rhodesandpartners.co.uk

Client: Walton Homes

Project: The Birches, Cheadle - Residential Development

Drawing Title: Drainage Details - Sheet 2

| Drawn By: | Checked By: | Date: | Scale: |
|---|---|---|---|
| AR | GL | 07/01/2020 | As noted @ A1 |

Drawing No: D23080-DR-DL-102 Revision: P2