This drawing is the copyright of Rhodes & Partners and must not be copied or passed to a third party without consent of the company.

Construction Notes:

1. General Notes:

1.1. This drawing to be read in conjunction with all relevant Architect's, Engineer's and Specialist's drawings and specifications. Work to be carried out in accordance with current good practice, Building Regulations and subsequent amendments, the project specification, relevant British Standards and codes of practice. Materials and components to be suitable for their intended use.
For setting out refer to Architects drawings.

2. Formation Preparation Notes:

2.1. Immediately prior to laying of the blinding or carriageway materials, the formation shall be prepared as follows:
All surfaces shall be cleaned and any wet material, mud, slurry, unsound or unstable material removed.
The surface shall be brought up to the formation level given on the approved drawings by the addition of any fill or by grading-off high spots.
The surface shall be regulated by grading to within a tolerance of +20mm to -30mm of true level.
The formation shall be finished by rolling 4 complete passes of a smooth-wheeled roller having a mass per metre width of at least 5000kg, or a vibratory roller having a mass per metre width of 3000kg.

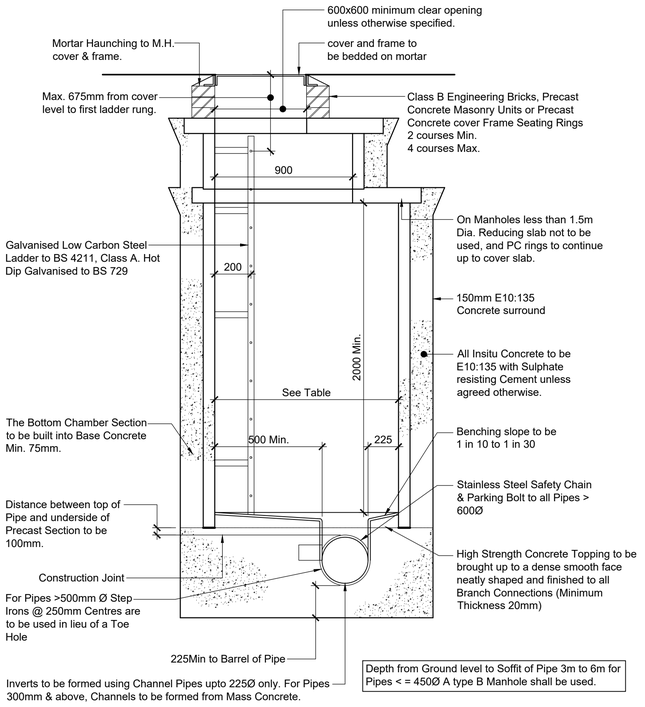

Depth from Ground level to Soffit of Pipe 3m to 6m for Pipes < = 450Ø A type B Manhole shall be used.

Typical Manhole Detail Type A (Section)
[Scale 1:20]

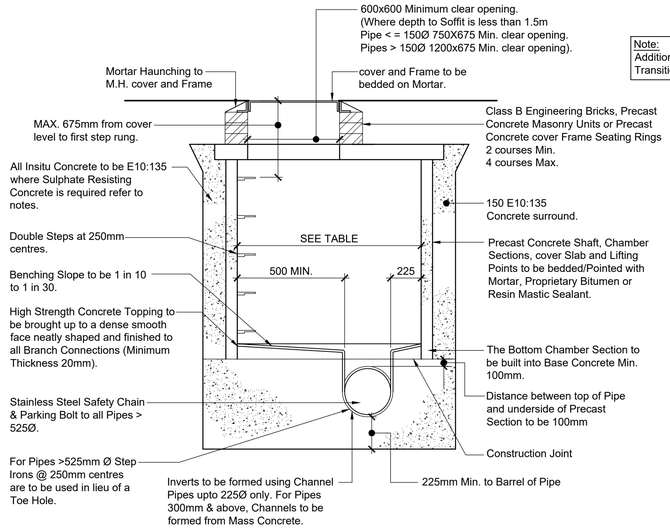

Diameter of Largest Pipe in Manhole (mm)	Min. Manhole Internal Diameter (mm)
< = 300mm (< 1.5m deep to Soffit)	1200
> 300mm (< 1.5m deep to Soffit)	The larger of 1800 or (DN + 775)
< = 450mm	1200
> 450mm	The larger of 1800 or (DN + 775)

Typical Manhole Detail Type B (Section)
[Scale 1:20]

Note:
Additional Rocker Pipes may be necessary to accommodate Transition of Pipe gradient to Vertical Downpipe.

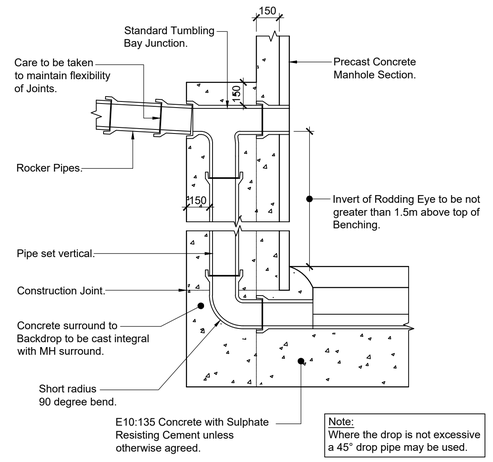

Note:
Where the drop is not excessive a 45° drop pipe may be used.

Typical Vertical Backdrop Detail
[Scale 1:20]

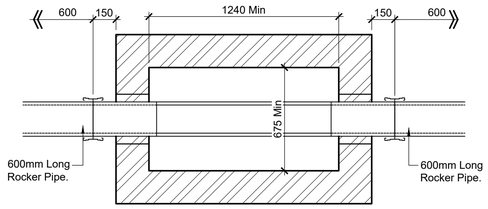

For Clear Internal Dimensions refer to Manhole Schedule.

Plan Section

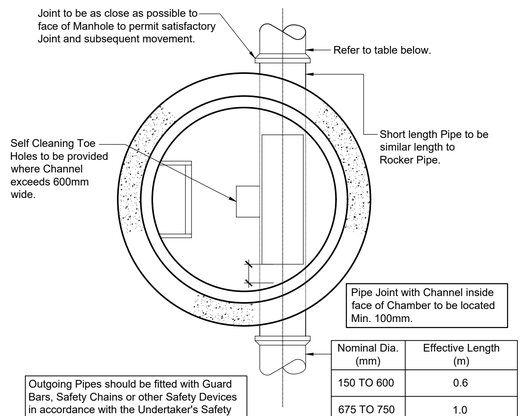

Pipe Joint with Channel inside face of Chamber to be located Min. 100mm.

Nominal Dia. (mm)	Effective Length (m)
150 TO 600	0.6
675 TO 750	1.0
825 & over	1.25

Outgoing Pipes should be fitted with Guard Bars, Safety Chains or other Safety Devices in accordance with the Undertaker's Safety Policy (For Pipes greater than 525Ø).

Depth from Ground level to Soffit of Pipe 3m to 6m for Pipes < = 450Ø A Type B Manhole shall be used.

Typical Manhole Detail Type A (Plan)
[Scale 1:20]

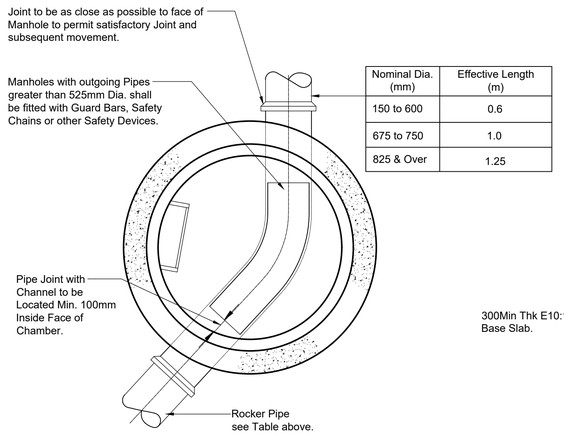

Nominal Dia. (mm)	Effective Length (m)
150 to 600	0.6
675 to 750	1.0
825 & Over	1.25

P.C.C. Chamber Rings used for Manholes less than 1500 to Soffit within Highways for load class D 400 shall be 600mm x 600mm clear opening. All maintenance shall be carried out from the surface. No step rungs shall be provided. The cover opening shall be located over the outgoing pipe.

Typical Manhole Detail Type B (E/F) depth to Soffit of Pipe 1.5m* to 3.0m
[Scale 1:20]

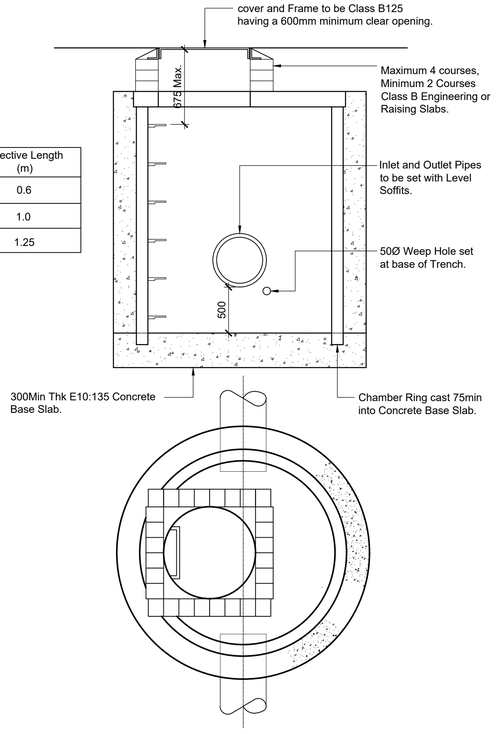

Typical Catchpit Manhole Plan & Section (Chamber Construction as for PCC Manholes)
[Scale 1:20]

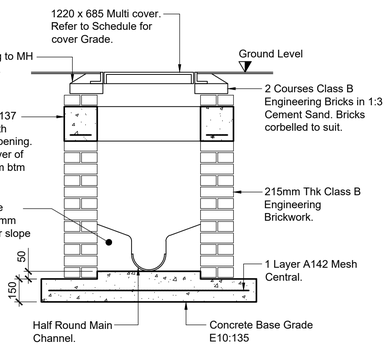

Cross Section

Brickwork Manhole Type C Detail (depth to Soffit up to 1.5m)
[Scale 1:20]

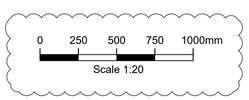

Rev	Description	By	Chkd	Date
P2	Scale bar added and "do not scale" annotations removed as requested	AR	GL	09/03/2020
P1	Preliminary Issue	AR	GL	17/02/2020

Drawing Status: PRELIMINARY

Rhodes & partners
Consulting Civil and Structural Engineers
The Lodge, Compstall Mills Estate, Compstall, Stockport SK6 5HN
t: 0161 427 8388 e: office@rhodesandpartners.co.uk

Client: Walton Homes

Project: The Birches, Cheadle - Residential Development

Drawing Title: Drainage Details - Sheet 1

Drawn By:	Checked By:	Date:	Scale:
AR	GL	07/01/2020	1:20 @ A1

Drawing No: D23080-DR-DL-101

Revision: P2