CONSERVATION DOORS

MUMFORD & WOOD
TOWER BUSINESS PARK,
KELVEDON ROAD
TIPTREE, ESSEX
CO5 0LX
Tel: 01621 818155 FAX: 01621 818175
EMAIL: sales@mumfordwood.com
WEB: www.mumfordwood.com

Ovolo Profile on Frame and Beading

SIDE SWING JAMBS

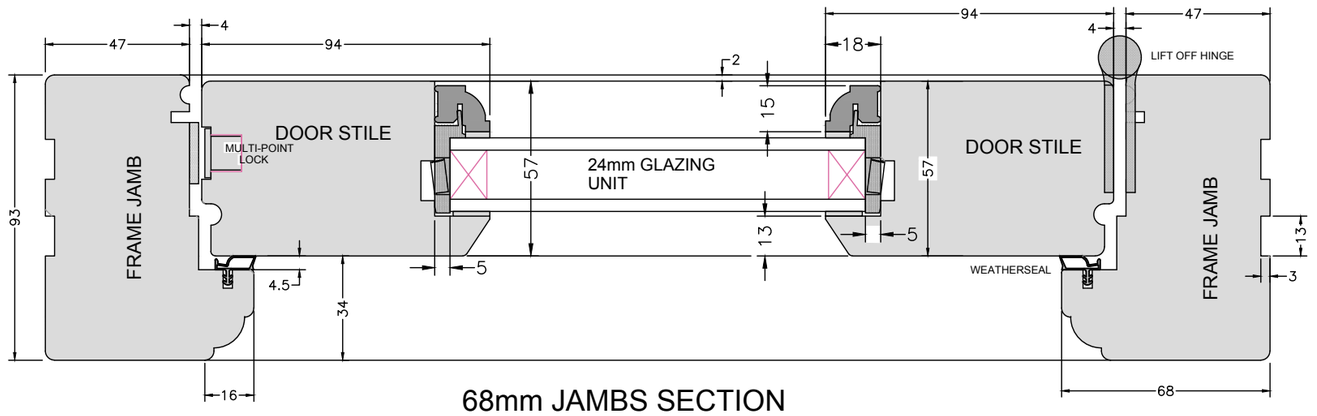

68mm JAMBS SECTION

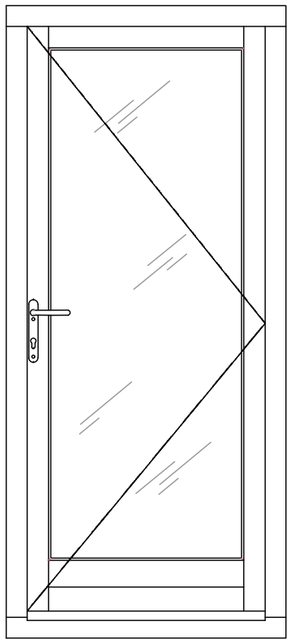

1:20 DOOR ELEVATION

GLAZING OPTIONS

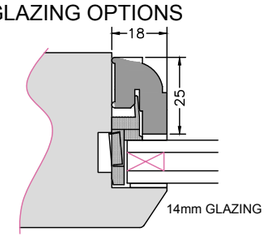

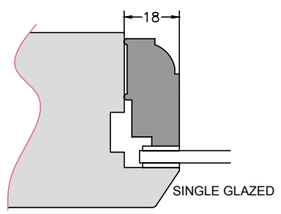

FOREFRONT
DEVELOPMENT CONSULTING
4 Ridge House, Ridge House Drive, Festival Park, S-O-T. ST1 5SJ
Office 01782 216912 WWW.FOREFRONTDC.UK

CLIENT

K. MIDDLETON / R. TIMMIS

PROJECT

Proposed change of use from disused agricultural barn into dwelling at Oak Barn, Bagnall, Staffordshire.

TITLE

Condition 11 - Door details

SCALE	DRAWN
1:2 & 1:20 @ A3	ATG
DRG NO.	DATE
20-106-12	21 / 02 / 20

REV.	DESCRIPTION	DATE

The contents of this drawing are the copyright of Forefront Development Consulting Ltd