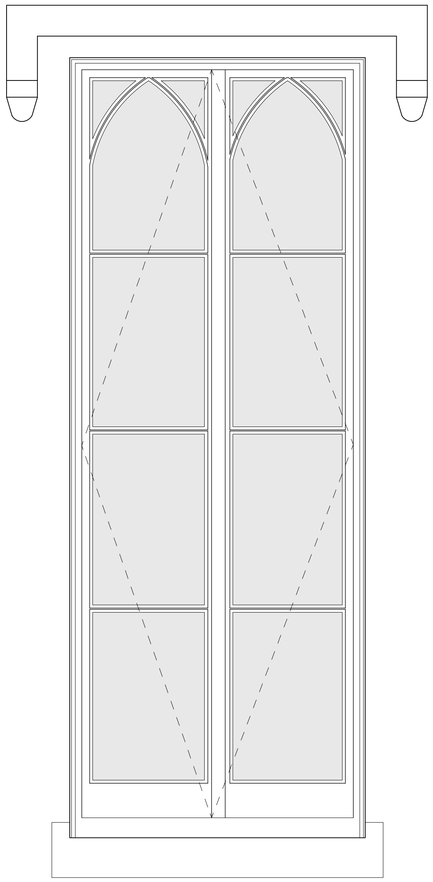

PROPOSED WINDOW ELEVATION

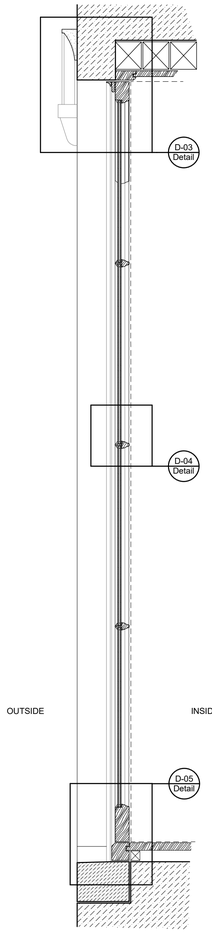

PROPOSED SECTION

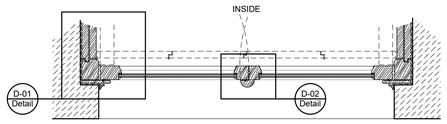

PROPOSED PLAN

0 1

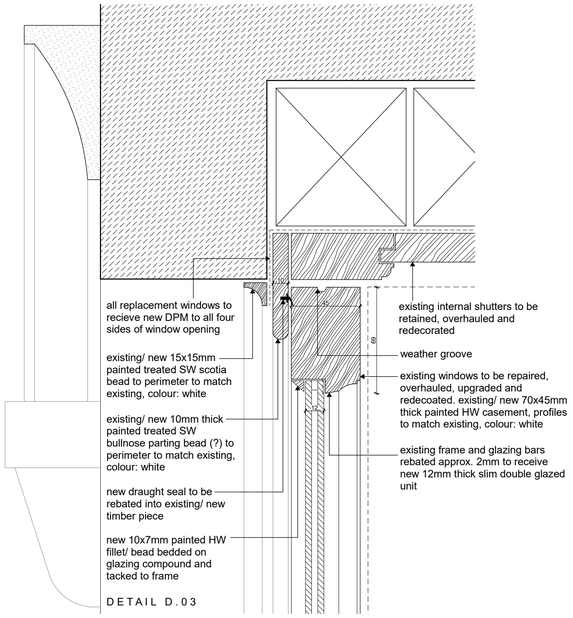

DETAIL D.03

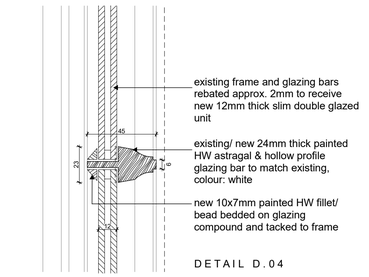

DETAIL D.04

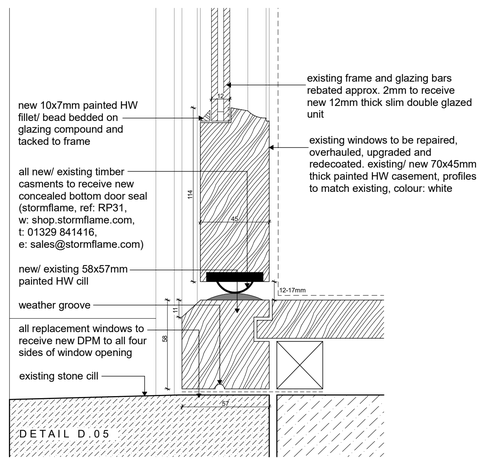

DETAIL D.05

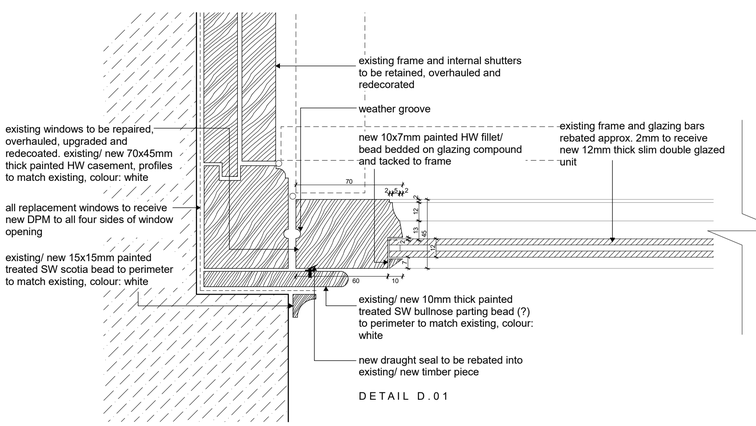

DETAIL D.01

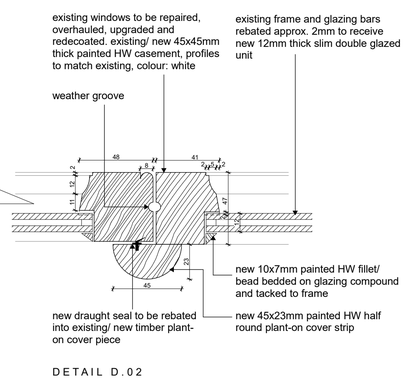

DETAIL D.02

Rev ID	Date	Comment
A	27/01/2020	
	04/02/2020	Glass spec altered + annotation modified

wood goldstraw yorath
ARCHITECTS QUANTITY SURVEYORS CDM CO-ORDINATORS
Churchill House, Regent Road, Stoke on Trent, ST1 3RH.
Tel: 01782 208000 Fax: 01782 208712 E-mail: info@woodgoldstraw.co.uk
www.woodgoldstraw.co.uk

Client.
Mr S. Beaumont

Project.
Cliffe Park Hall, Rudyard

Scale	Issue Date
1:10, 1:2	04/02/2020
Sheet Size: A1	Drawn: JLL

Title.
Window Type A Proposed Details

Drawing Number / (Revision)	Revison ID
3521-09-52A	A

CAD file path:
X:\0 PROJECTS\3521 Beaumont, Mr S Snr\3521-09 Rudyard Castle\Design\Arch\CAD\Cliffe Park.pln

Copyright. Wood Goldstraw Yorath LLP.
Contractors are to check all dimensions on site and refer any discrepancies to the Architect immediately. This drawing has been prepared for planning purposes only and to the best of our knowledge the original digital document is accurate at the stated scale. However, we cannot accept liability for the accuracy of third party data (OS mappings, topographical survey information, etc) used in the production of this document which we have relied upon in good faith. Key dimensions are noted for reference and any further specific dimensional information can be provided upon request.