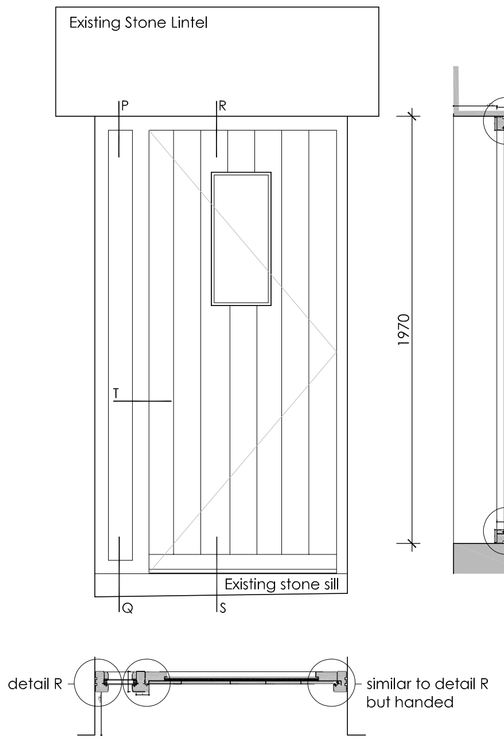

D.1.01

External Door & Frame -
1:20



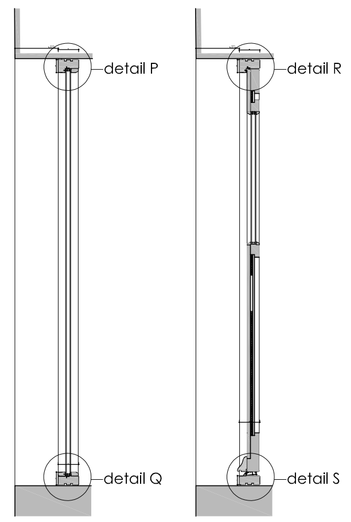

External Door & Frame -
1:20

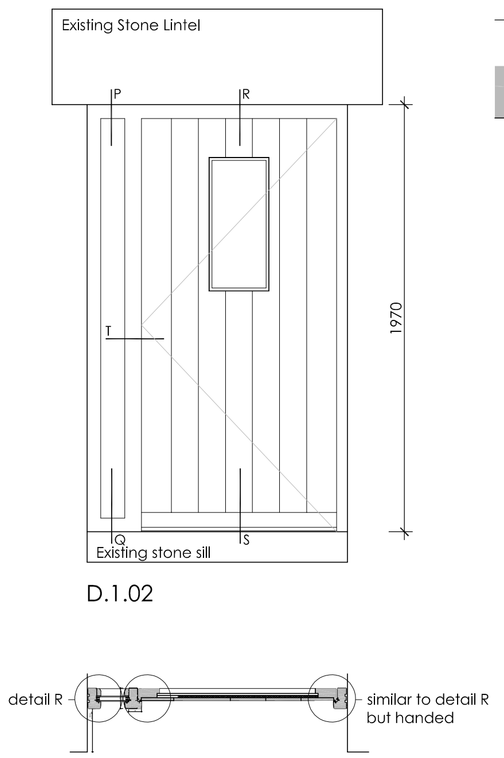

D.1.02

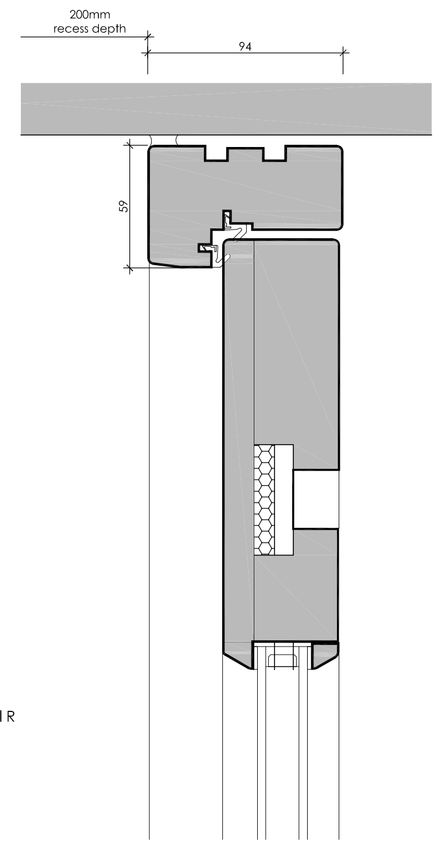

Entrance Door & Side Screen -
Head Detail P 1: 2



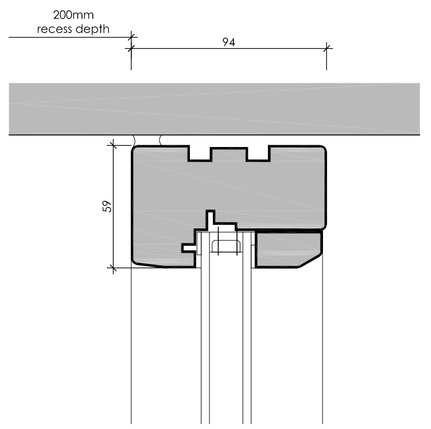

Entrance Door & Side Screen -
Head Detail P 1: 2

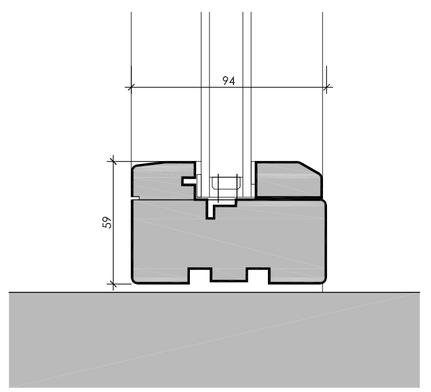

Entrance Door & Side Screen -
Cill Detail Q 1: 2

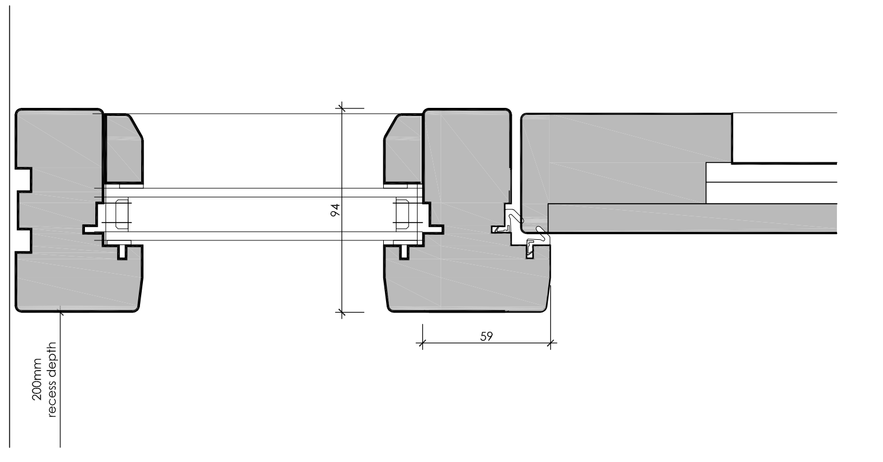

Entrance Door & Side Screen -
Jamb Detail R 1: 2



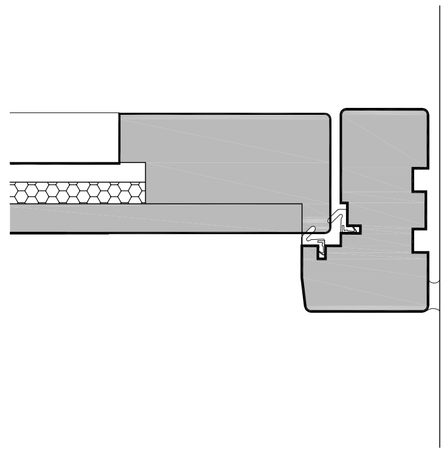

Entrance Door & Side Screen -
Jamb Detail similar to R
(handed) 1: 2

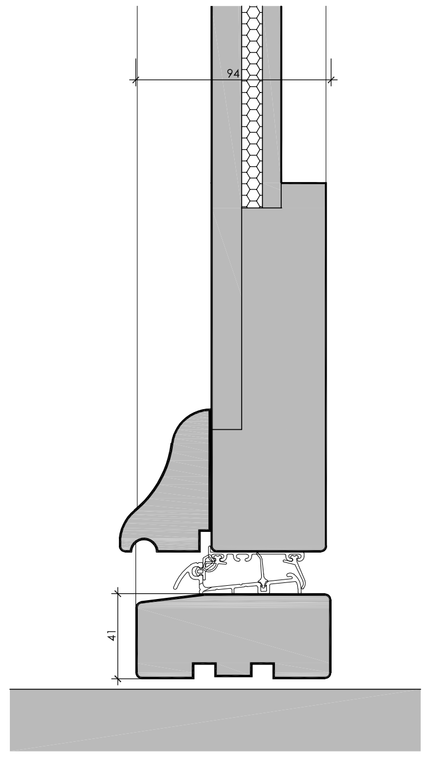

Entrance Door & Side Screen -
Cill Detail Q 1: 2

Copyright of this drawing is vested in the Architect and it must not be copied or reproduced without consent. Figured dimensions only are to be taken from this drawing. All contractors must visit the site and be responsible for taking and checking all dimensions relative to their work. Hewitt&Carr Architects Ltd are to be advised of any variation between drawings and site conditions.
THIS DRAWING IS FOR PLANNING PURPOSES ONLY AND CLIENTS/CONTRACTORS ARE ADVISED TO CLARIFY DIMENSIONS WITH THE ARCHITECT PRIOR TO SETTING OUT.

Rev.	Drawn	Comments	Date

Windows and all shutters to be assessed for suitability and repaired in like-for-like materials/profiles wherever appropriate, utilising single pane glazing held in place with linseed oil putty. If beyond repair, new frames should aim to recreate the existing profile to receive 14mm Heritage slimline double glazed units with max. 20mm true glazing bars and 8mm sight line, utilising float glass held in place with linseed oil putty. 30mm recess depth of frame is approximate - the frame should be positioned with a recess depth to match the recess depth of the current window.

All other openings (with the exception of W000) to receive 24mm double glazed units utilising float glass with timber beads internally. Set back a minimum 200mm within the reveal to minimise external reflection and appearance.

Additional hidden support steel lintels/plates may be required to strengthen & support damaged/inadequate lintels or stone lintel to be replaced with new stone lintels to match existing. All with Conservation Officers prior agreement.

Windows to be fitted with butt hinges complete with traditional window stay and casement fasteners. All joinery to be primed and finished in paint colour - RAL 7032 Pebble Grey

Dimensions of openings are indicative only and must be checked on site prior to ordering. Window details may require further clarification from window manufacturer, and details approved by Conservation Officer, prior to window manufacture.

F.L. - Window with fixed casement.
O.C. -Window with opening casement.

DETAILS FOR BARNS A & B

Drawings to be read in conjunction with 0101 AL(0)10, AL(0)11, AC(3) 01 & AC(3)02.

Hewitt&CarrArchitects
A: The Studio I 7A High Street I Cheadle I Staffordshire I ST10 1AA
T: 07803 256299 I 07971 396376
E: enquiries@hcarchitects.co.uk
W: www.hcarchitects.co.uk

Client
Mr T Boote

Project
Conversion of Listed Barn into Holiday Accommodation to Catswall Farm, Huntley Lane, Denford, ST13 7JX

Title
Barns A & B
External Door Details

Status
Planning

Date July 2019
Drawn DD
Scale @A1 As Stated
Checked

Project No 00101
Drawing No. AC(3)03
Rev

PLANNING

File Ref: H:\REF