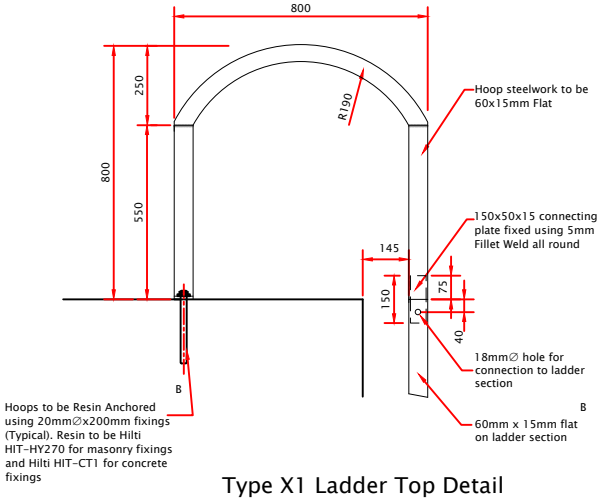

Type X1 Ladder Top Detail
Side Elevation
Scale 1:20

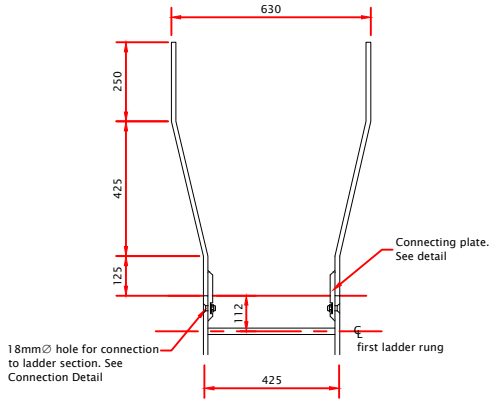

Front Elevation
Scale 1:20

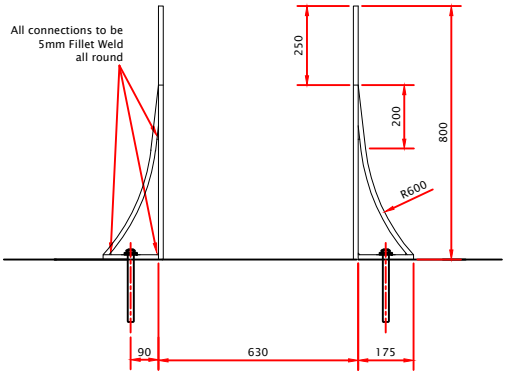

Rear Elevation
Scale 1:20

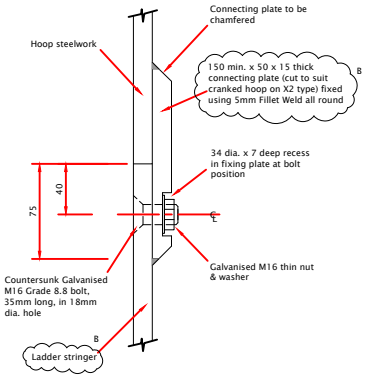

Connection Between Ladder and Hoop
Scale 1:5

PROJECT P08820 DRAWING
STANDARD DETAIL 6B
LOCK LADDER HOOPS
ORIGINAL SIZE A4