NOTE:
All concrete foundations and backing to kerbs are to be mechanically vibrated.
All proposed new kerbing should be to pre cast concrete.

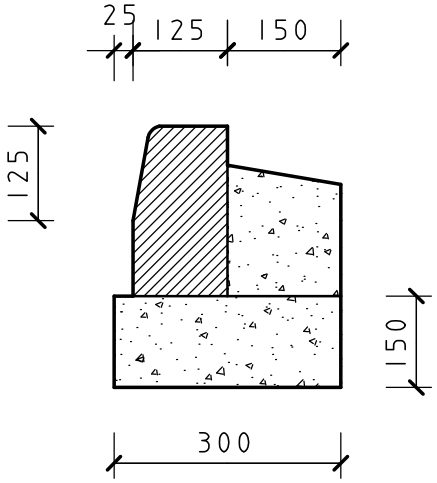

HALF BATTERED KERB: TYPE HB2

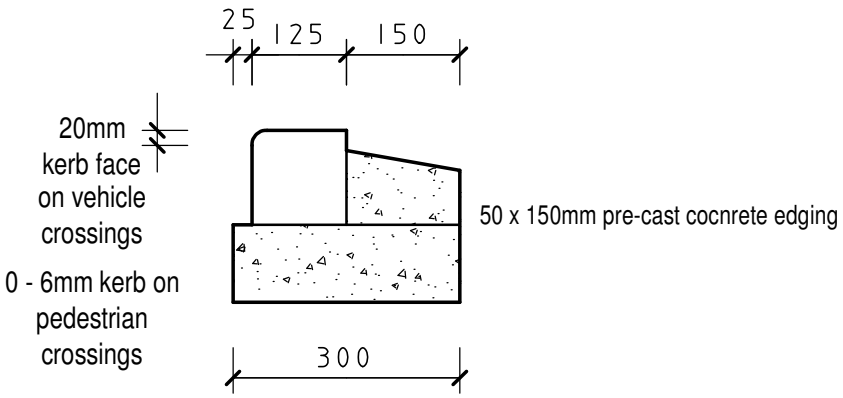

BULLNOSE KERB: TYPE BN

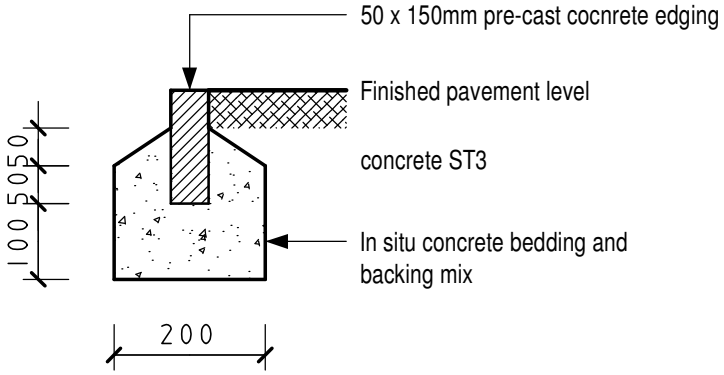

EDGING TYPE 1

Grace Street Developments Ltd

PROPOSED HOUSING DEVELOPMENT
LAND OFF MACCLESFIELD ROAD,
LEEK,
STAFFORDSHIRE,
ST13 8LD.

KERB + EDGING DETAIL

Date	Sheet	Scale
OCT 2019	A4	NTS
Drg No.	Rev.	Drawn
2019-2408-28	-	ASR

SAMMONS Architectural LIMITED
Chartered Institute of Architectural Technologists Registered Practice
10 Cawdry Buildings, Fountain Street, Leek. ST13 6JP
Telephone: 01538 386002
E-mail: info@sammonsltd.co.uk
Web: www.sammonsltd.co.uk

This drawing is copyright.
All dimensions must be checked prior to commencement.