

PROPOSED FACING MATERIALS.

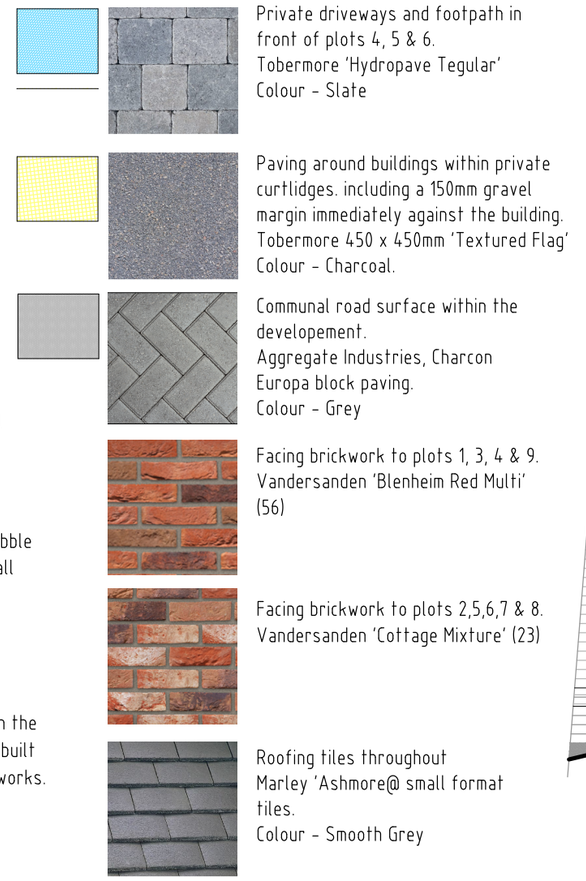

Private driveways and footpath in front of plots 4, 5 & 6.
Tobermore 'Hydropave Tegular'
Colour - Slate

Paving around buildings within private curtlidges. including a 150mm gravel margin immediately against the building.
Tobermore 450 x 450mm 'Textured Flag'
Colour - Charcoal.

Communal road surface within the developement.
Aggregate Industries, Charcon Europa block paving.
Colour - Grey

Facing brickwork to plots 1, 3, 4 & 9.
Vandersanden 'Blenheim Red Multi' (56)

Facing brickwork to plots 2,5,6,7 & 8.
Vandersanden 'Cottage Mixture' (23)

Roofing tiles throughout
Marley 'Ashmore@ small format tiles.
Colour - Smooth Grey

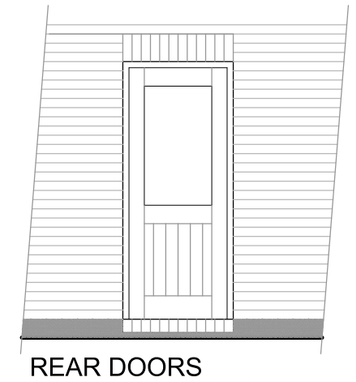

REAR DOORS

Half glazed, painted timber faced composite door set
Door set minimum 70 mm back from the face of the brickwork

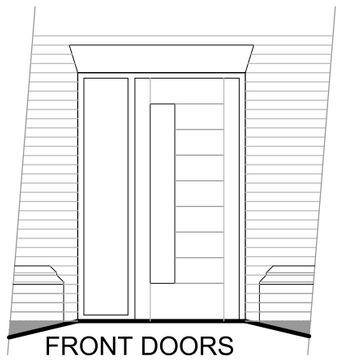

FRONT DOORS

Contempory styled, timber faced composite door set.
Door set minimum 70 mm back from the face of the brickwork

DETAILS OF VERTICAL SLIDING SASH WINDOWS TO FRONT ELEVATIONS.

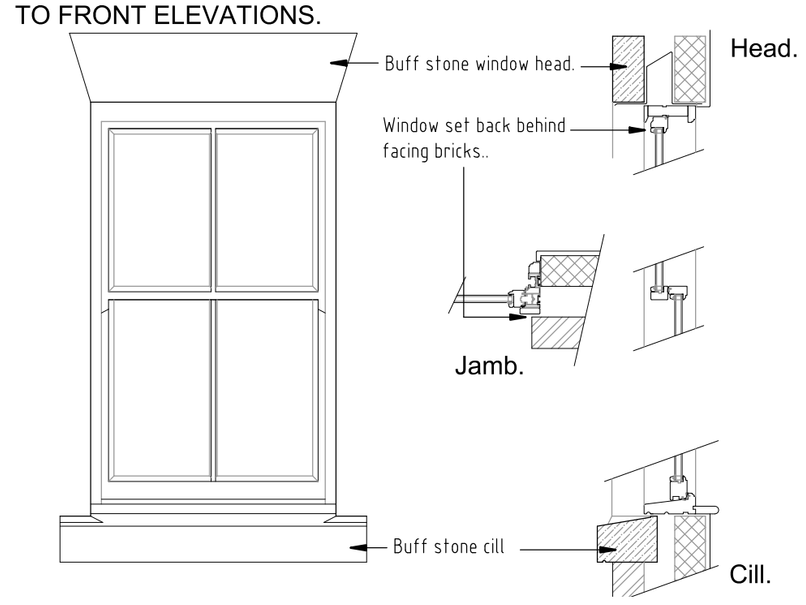

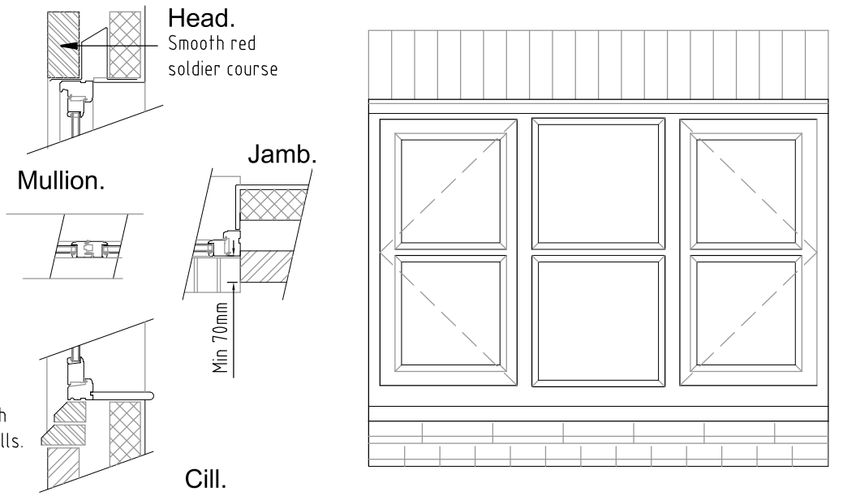

DETAILS OF FLUSH CASEMENT WINDOWS TO REAR ELEVATIONS.

BOUNDARIES BETWEEN DWELLINGS

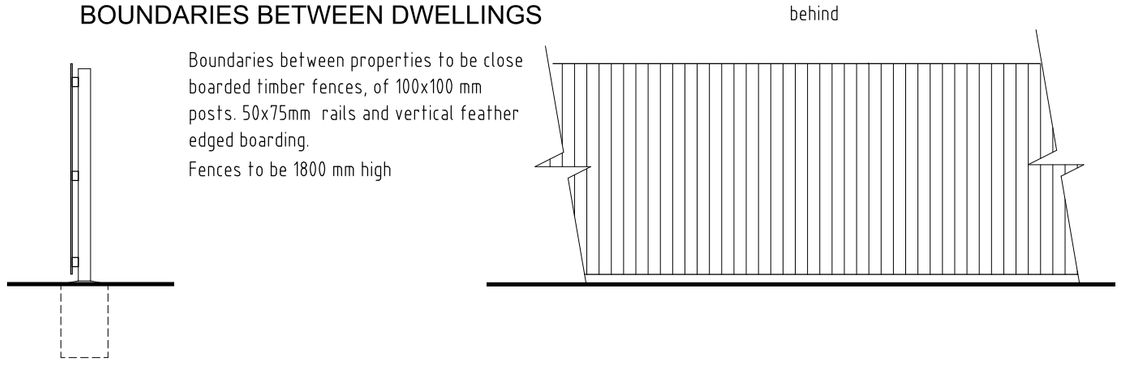

Boundaries between properties to be close boarded timber fences, of 100x100 mm posts. 50x75mm rails and vertical feather edged boarding.
Fences to be 1800 mm high

LIGHTING.

In accordance with the requirements of the Ecology Management Plan site lighting will be low level and fairly minimal. Consisting of a series of either 900 mm high illuminated bollards or hooded wall lights recessed into the gate posts.

Abacus 'Classique AL1000' Black illuminated bollard, 900 mm high x 180mm dia.

Abacus 'Vetta 22000' Black wall light set into stonework gate posts, 900 mm high.

There will be np security type external flood lighting on the houses. just hooded bulkhead fittings to the sides of the external doors, switch operated from inside.

NORTH AND WESTERN SITE BOUNDARIES

Boundaries to the north and west of the site to be 1200 mm high timber post and rail of 100x100 mm posts. 50x75mm rails with permanent chainlinj / Badger fencing minimum 1000 mm high, set 300 mm into ground and projecting 300 mm to the field side.
Western boundary only to have a native species hedgerow as described on drawing 113-30E

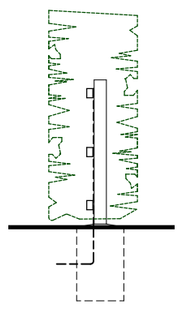

DETAIL OF STONE WALL BOUNDARIES

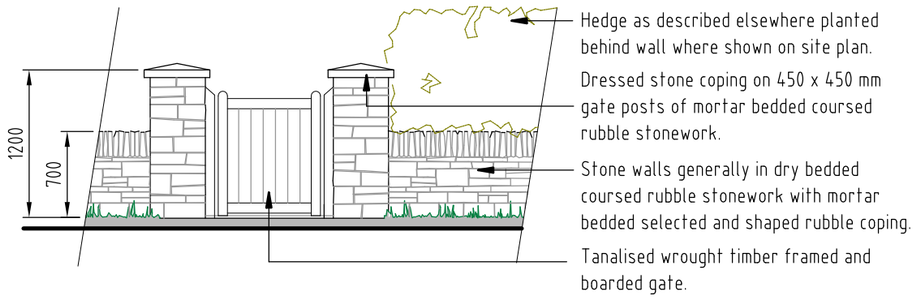

PICKET FENCE TO FRONTS OF PLOTS 4, 5 & 6.

Picket fence of 100 x 15 x 850 mm timber boards with shaped ends on 50 x 75 mm rails and 75 x 75mm posts set 450 mm into the ground on with concrete surround.

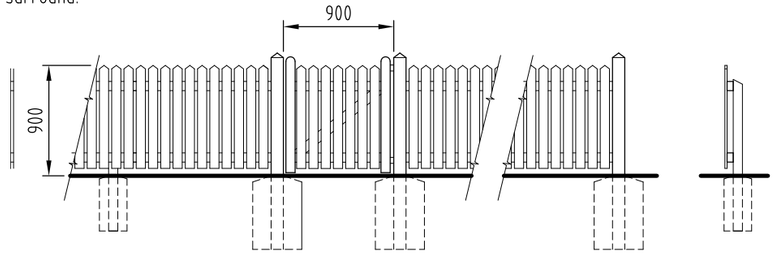

TYPICAL VEHICAL GATE THRO. STONE WALL.

Gate posts to be 100 x 100 mm tanalised timber.
Gates to be ledged and braced, faced with similar boards.with similar boards

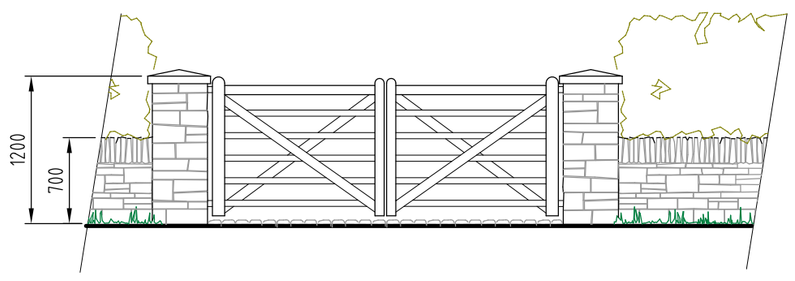

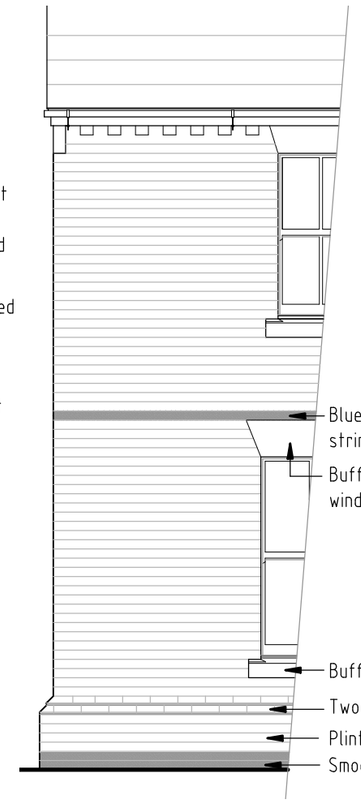

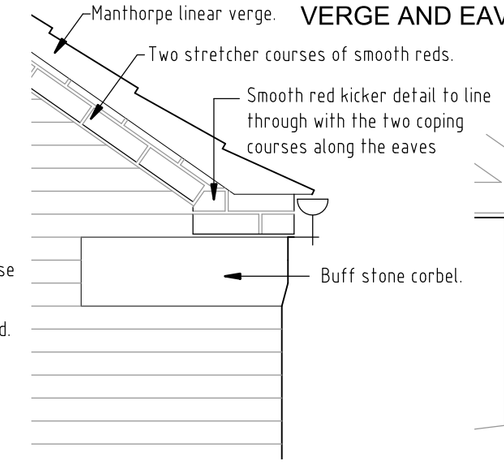

VERGE AND EAVES DETAILS

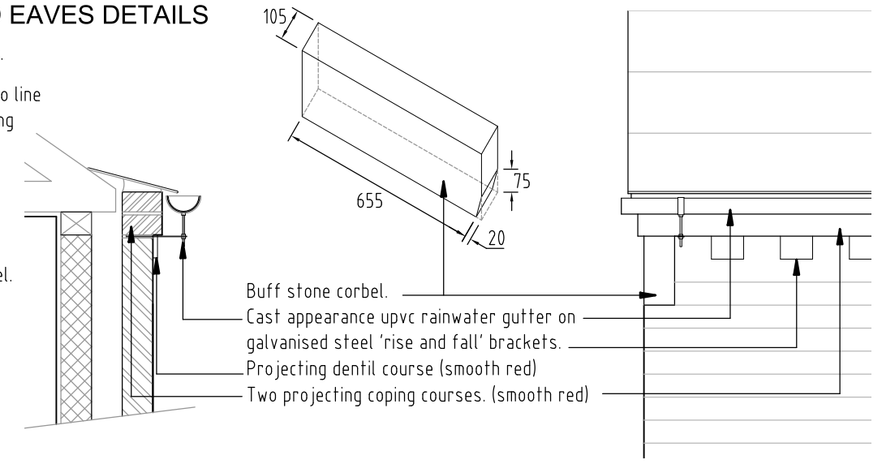

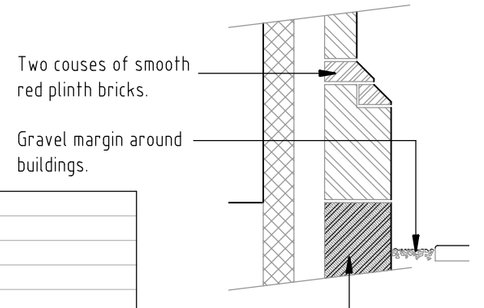



David Tatton Architect.
4 CHURCH BANK : KEELE : STAFFORDSHIRE : ST5 5AT.
Landline - 01782 619522 Mobile - 07748385590.
Email - mail@davidtattonarchitects.net

CLIENT
HUMPHRIES BUILDERS LTD.

PROJECT
Proposed Housing,
Coltslow Farm,
Stockton Brook,
Stoke-on-Trent ST9 9LH

DRAWING
Building details, Hard surfacing and Boundary treatments.

SCALE	DRWG NO.	
1/ 200 1/500 & 1:1250 @ A2	113 / 42F	
	DATE October. 2019	REV.F