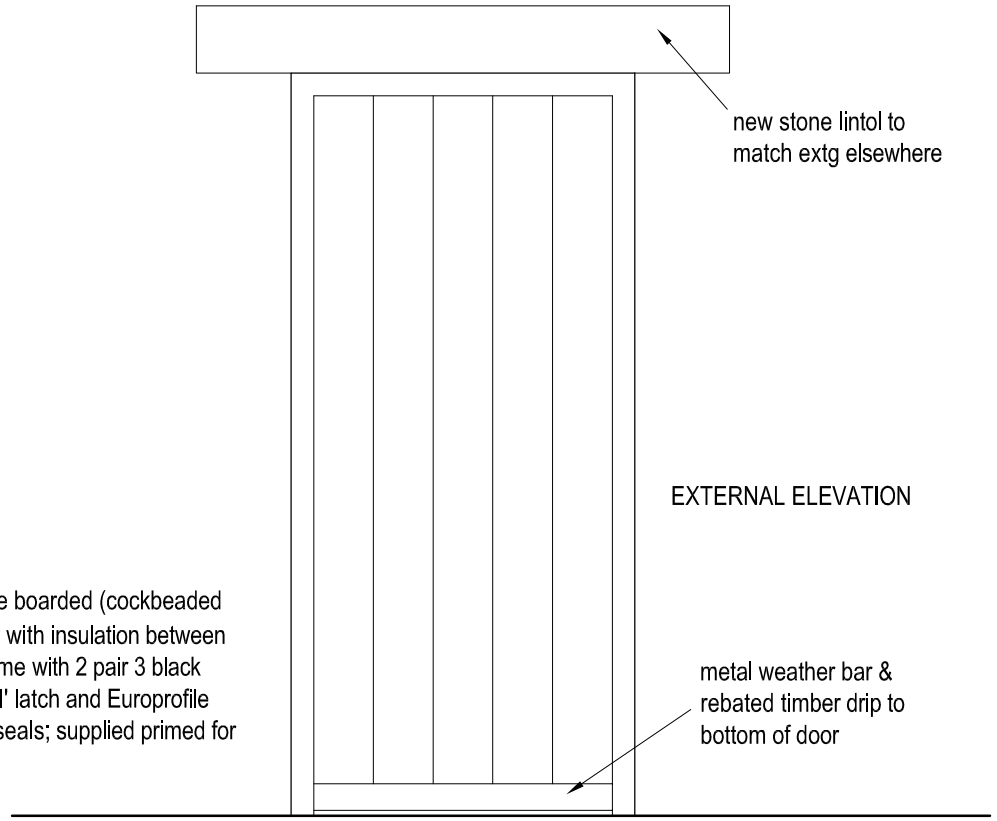

Door D1: double boarded (cockbeaded t&g) redwood door with insulation between boards hung in frame with 2 pair 3 black hinges; black 'Anvil' latch and Europrofile deadlock; draughtseals; supplied primed for painting

Door D2: single-pane double glazed (safety glass) softwood door for painting;m frame set back 110 into rebate from external face of stonework; extg stone lintol retained with new stone threshold to match

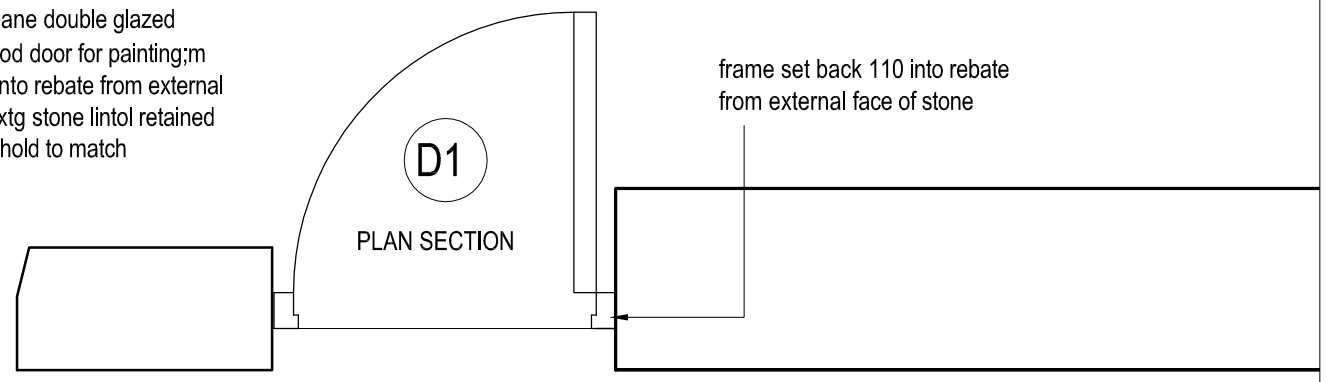

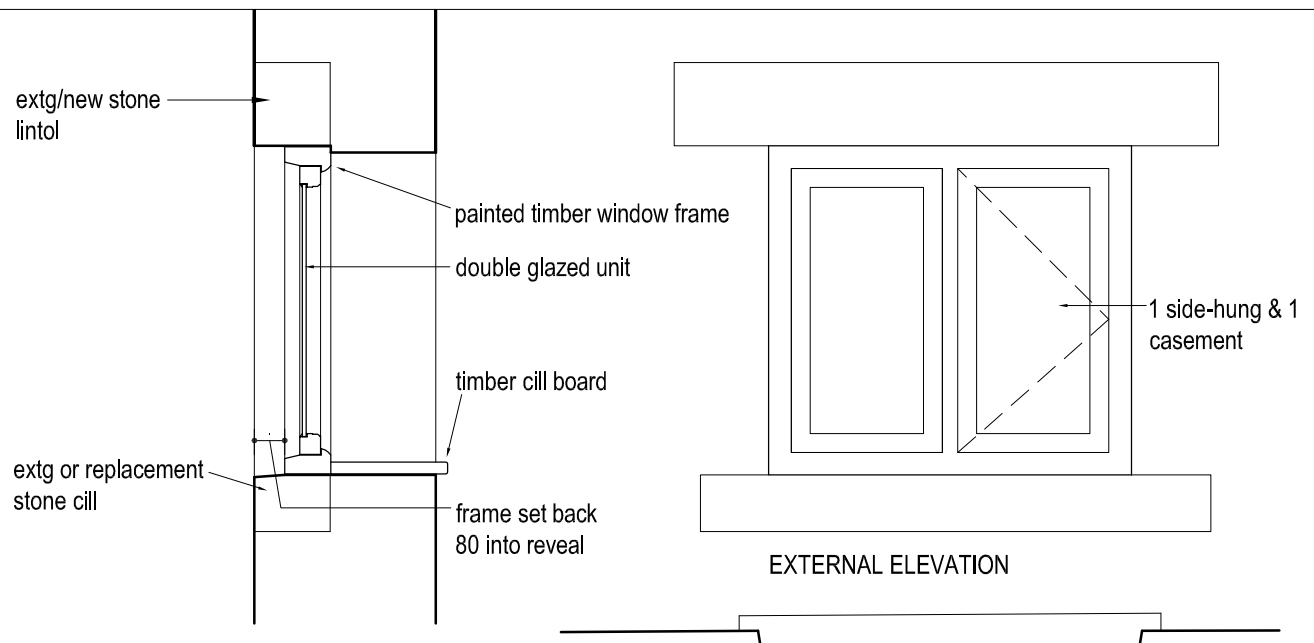

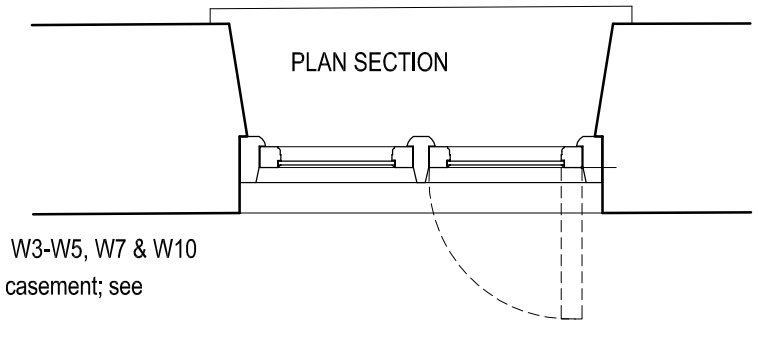

TYPICAL WINDOW DETAILS - W3-W5, W7 & W10
(W1, W2, W8 & W9 similar but with no fixed casement; see elevations for proportions)

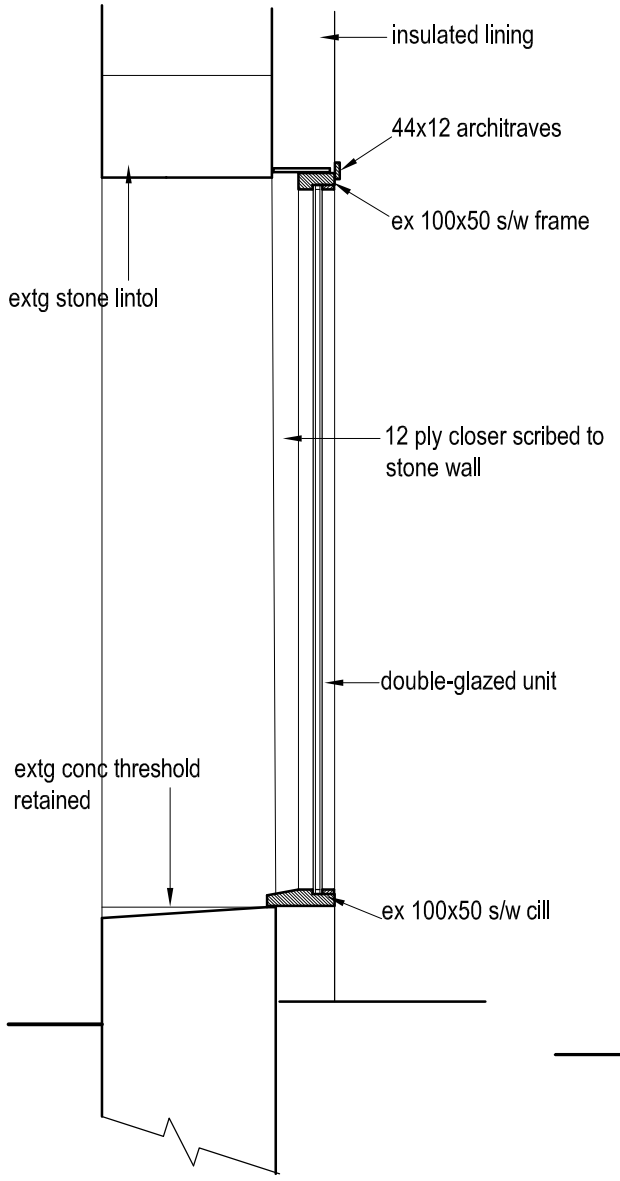

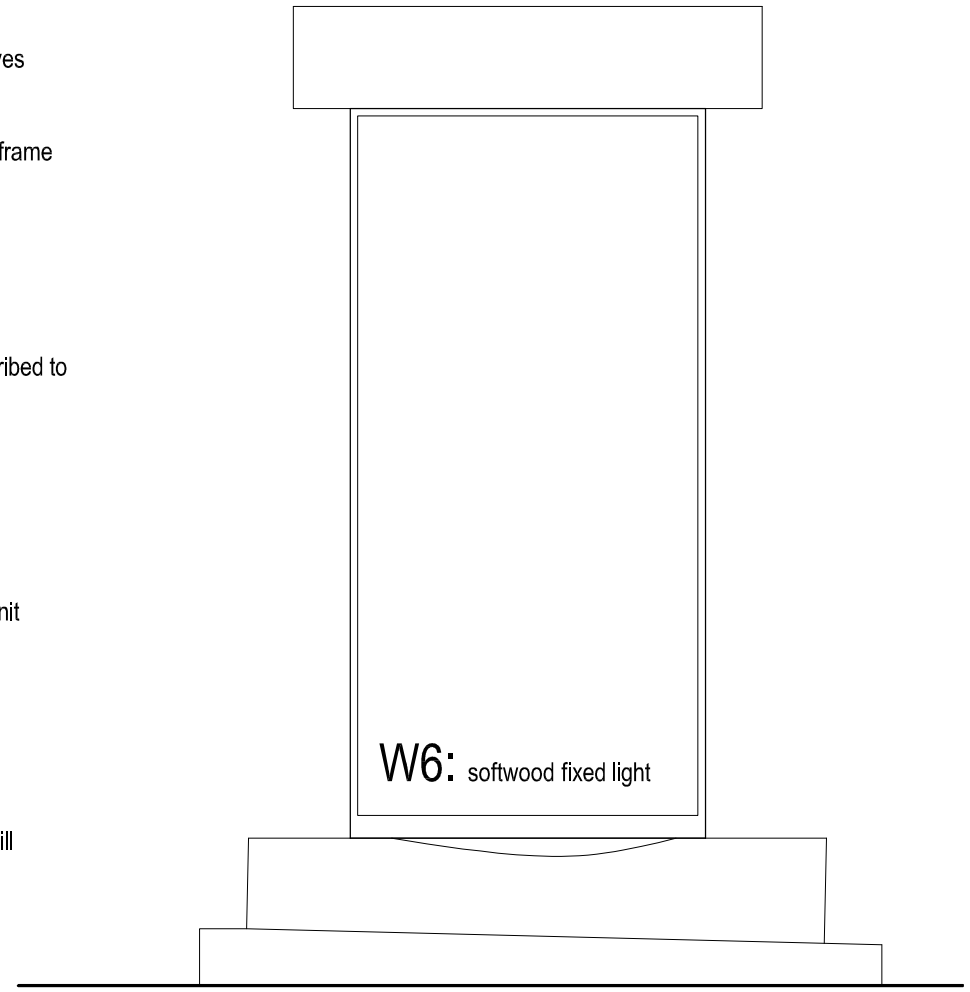

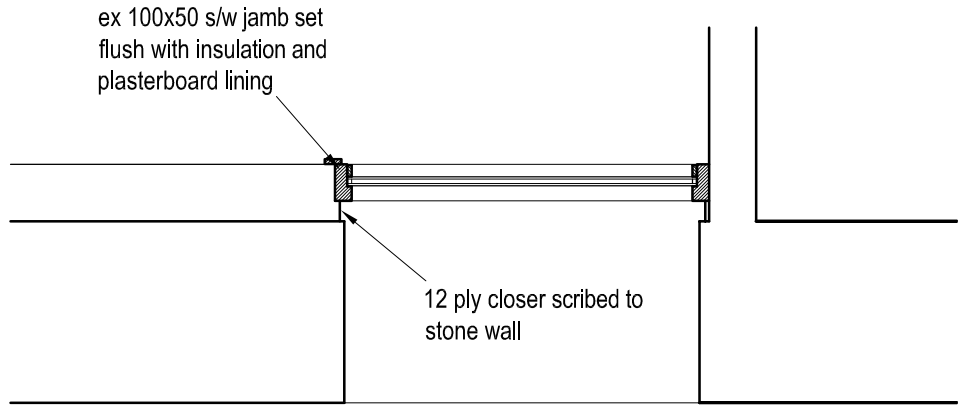

WINDOW 6 DETAILS

0 5 10m

job	Holly Tree House, Horton Renovation and Alterations		
title	Door & Window Details		
date 23.07.19	scale 1/20 @ A3	dwg. no. HTH-100	rev. .

Ian Ankers architecture
Building and Design Consultants
Ryecroft Farm, Rushton Spencer, Macclesfield, SK11 0RP
t 01260 546944
e ian@iankers.co.uk
w www.iankers.co.uk