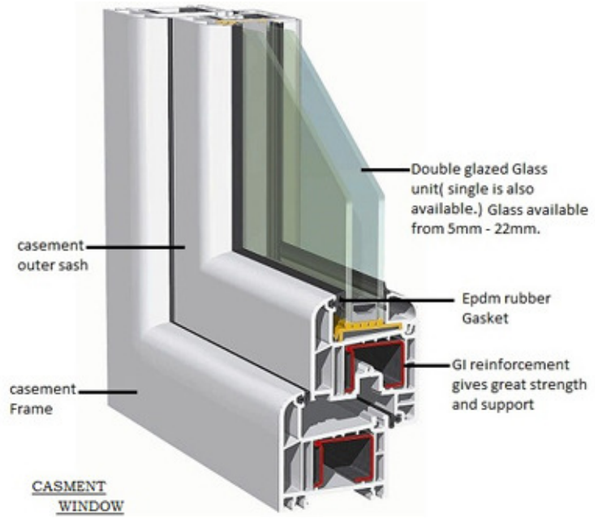

TYPICAL WINDOW DETAILS

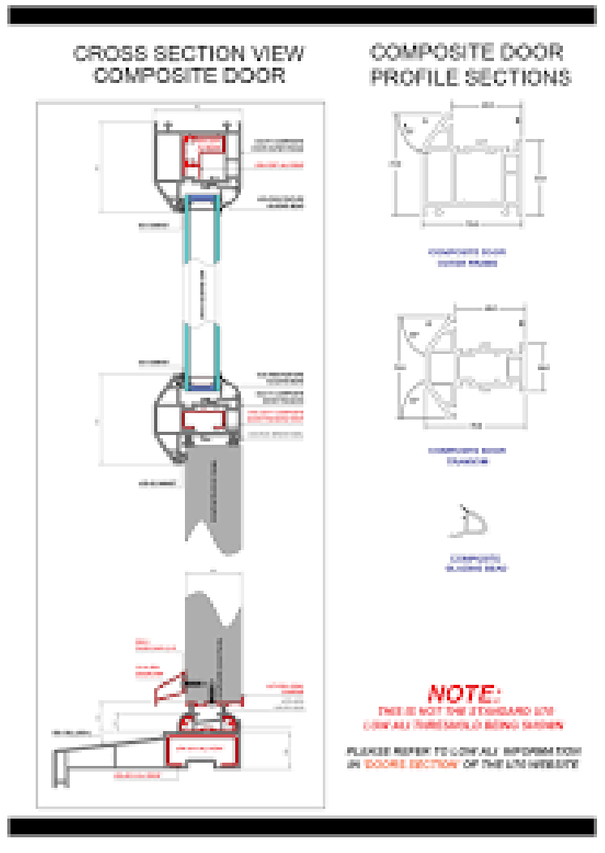

TYPICAL DOOR DETAILS

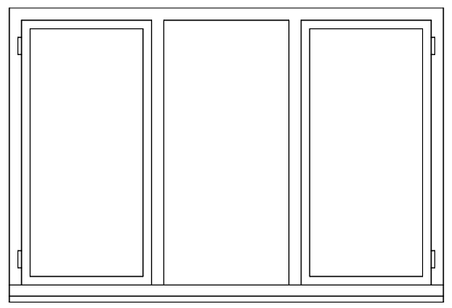

ELEVATIONS 1:20

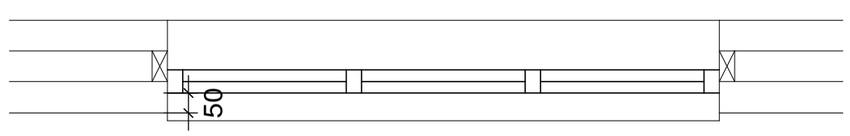

PLANS 1:20

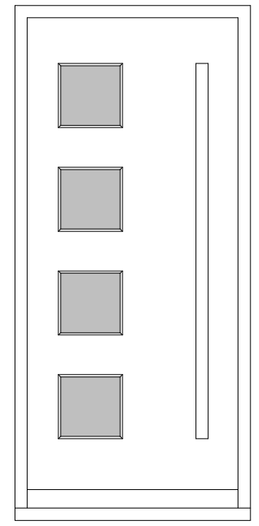

ELEVATIONS 1:20

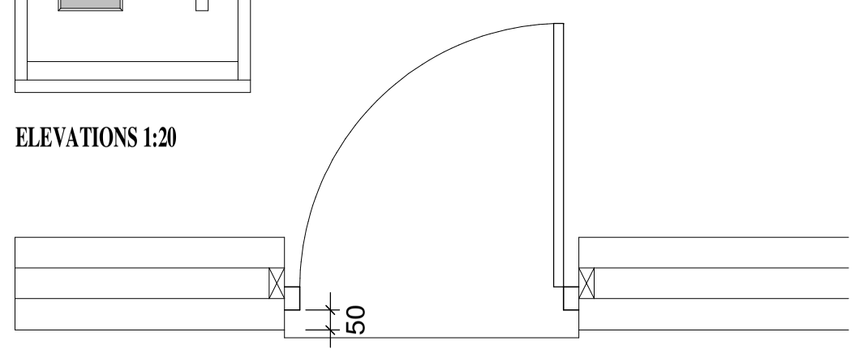

PLANS 1:20

Building Design

CIAT
Registered Practice

TITLE

PROPOSED REPLACEMENT DWELLING
AND NEW DWELLING
2 POST LANE
ENDON
STOKE-ON-TRENT
ST9 9DT

CLIENT

MARK LEESE BUILDERS

DRAWING NO.

WINDOW AND DOOR DETAILS

SCALE
1:20

DATE
NOVEMBER 2018

B. BLAKEMAN CIAT

15A, WHITMORE ROAD, NEWCASTLE,,
STAFFORDSHIRE. ST5 3LY
TEL/FAX 01782 632911