ARBORICULTURAL METHOD STATEMENT

Client: Mr. P. Hammond

Site: Home Farm
Bradshaw Lane
Ipstones

Date: 11th July 2019

Ref: THR19-67

Contents

1.0 Introduction

2.0 Phasing, Monitoring and Supervision

3.0 Root Protection Area (RPA)

4.0 Tree Protection Fencing

5.0 Restrictions within the Tree Root Protection Areas

6.0 Services near to Retained Trees

Appendices

Appendix A – Tree Survey and Work Schedule

Appendix B – Tree Protection Fencing
Ground Protection and Scaffolding within RPAs

Appendix C – Tree Constraints Plan
Arboricultural Impact Assessment Plan
Tree Protection Plan

1.0 Introduction

1.1 The following method statement has been prepared by Tree Heritage Ltd for use in the proposed development in accordance with the planning permission granted on 11th November 2016 ref no. SMD/2016/0322. This document is intended to fulfil Condition 16, which relates purely to Arboricultural Works and protection of the trees.

1.2 This Arboricultural Method Statement is based on information gathered on site in accordance with BS 5837:2012.

1.3 This has been produced to aid the safe and healthy survival of all trees to be retained on the site. Implementation of the protection methods is integral to achieving this goal.

1.4 For details of trees to be retained, location and types of protection measures reference should be made to drawings THL-0779-3.

1.5 The information contained within this Arboricultural Method Statement is in line with BS 5837:2012 *Trees in relation to design, demolition and construction – Recommendations*.

2.0 Phasing and Monitoring

2.1 The following phasing are designed to protect the trees that are to be retained on site, from pre-development stage throughout construction to ensure their survival post development.

2.2 As the site is a domestic garden and the owner is also keen to avoid damage to the trees it should not be necessary to monitor the site once the protective fencing is in place.

2.3 The order in which the works should commence is as follows:

1. **Pre- Commencement Site meeting –** This should include a detailed discussion of the exact position of the protective fences, the necessity to ensure that they are maintained.

2. **Tree Felling and Surgery –** Including all felling and pruning works. The trees that are intended for removal are clearly shown on the Arboricultural Impact Assessment drawing THL-0779-2

3. **Tree Protection Fencing –** To be erected as shown on drawing THL-0779-3 prior to any development work commencing on site. This will ensure that the area around all the retained trees will remain untouched during the construction phase. This should remain in place until all work is completed.

3.0 Root Protection Area

3.1 Based on the tree survey data, Root Protection Areas (RPA's) have been calculated for every retained tree. The RPA's are designed to protect at least a functional minimum of tree root mass in order to ensure the trees survive the development process.

3.2 The RPA of the retained trees has been calculated using the diameter of the stems and the position of the suggested barrier is shown on the drawing THL-0779-3.

3.3 The proposed work in the area to the North of the existing buildings will be repairs and renovation work and access will only be on foot. To allow for access the protection barriers will need to be offset and therefore ground protection will be required to protect the tree roots from compact. This will be provided in the form of scaffold planks laid on a base of geotextile membrane and a compressible layer, such as coarse sand or wood chip, as suggested in BS 5837:2012 and shown in Figure 3 (appendix B of this report). This also shows how scaffolding can be erected if required.

3.4 It is the responsibility of everyone engaged in the development process to respect the tree protection measures and observe the necessary precautions within and adjacent to them.

4.0 Tree Surgery/Felling

4.1 The proposed tree works is listed in the Tree Survey and Works Schedule. Most of the tree removals are being done for safety reasons or because the trees have been allowed to grow too close to the existing buildings

4.2 Some pruning work is recommended to clear the tree canopy back from the existing buildings and drives for access and to allow repairs to be carried out to the existing buildings.

4.3 The removal of some deadwood from retained trees is also recommended for safety reasons.

5.0 Restrictions within the Tree Protection Areas

5.1 Inside the Tree Protection Areas, the following shall apply;

- No Access of any kind without permission from the supervising Arboriculturalist.
- No mechanical excavation whatsoever.
- No excavation by other means without a detailed method statement being agreed by Supervising Arboriculturalist.
- No raising or lowering of the levels for any purposes.
- No storage of plant or materials.
- No mixing of materials.
- No storage or handling of any chemicals.
- No disposal of waste such as concrete mixer washings or surplus mortar.

6.0 Services near to Retained Trees

6.1 The services for this site will all be routed outside the RPAs of any of the trees.

6.2 The electric supply will enter from the South from an existing supply.

6.3 The drains will also be taken out to the South away from the trees.

6.4 The new water supply will be routed from land to the North of the existing drive and will enter the site well outside the RPAs of any of the retained trees.

Tree Heritage Ltd

H.E. Williams

H.E. Williams

11th July 2019

Tree Heritage Ltd, 100 North St, Leek, Staffs, ST13 8DQ
T: 01538 384019 E: info@treeheritage.co.uk

APPENDIX A: TREE SURVEY and WORK SCHEDULE

KEY:

Measurements	Life Stage	Physiological Condition	Category Grading	Symbols
Height - *Metres* Stem Diameter - *Millimetres at 1.5m above ground level* Branch Spread - *Metres (North, South, East and West)* Crown Clearance - *Metres* RPA Radius - *Metres* Estimated Remaining Contribution - *Years* FSB - First Significant Branch - *Metres*	Y - *Young* SM - *Semi-Mature* EM - *Early Mature* M - *Mature* OM - *Over-Mature* V - *Veteran*	G - *Good* F - *Fair* P - *Poor* D - *Dead*	A - *High (green)* B - *Moderate (blue)* C - *Low (grey)* *U - Poor/Trees for removal (red)* **Sub-Categories:** 1 - *Mainly Arboricultural value* 2 - *Mainly Landscape value* 3 - *Mainly Cultural value*	< - *Less than* ~ - *Approximately* > - *Greater than*
RPA - *Root protection area (equivalent to a circle with a radius 12x the stem diameter measured at 1.5m above ground level)*				

Site: Home Farm, Bradshaw Lane
Surveyed by: Hugh Williams
Date: 10/07/19

Tree Heritage Ltd, 100 North St, Leek, Staffs, ST13 8DQ
T: 01538 384019 E: info@treeheritage.co.uk

Tree Ref.	Species	Height	Stem Diameter	Branch Spread				Crown Clearance	FSB Height + Direction	Life Stage	Phys. Condition	Structural Condition	Recommendations	Estimated Remaining Contribution	Category Grading	RPA Radius
				N	S	E	W									
T1	Fagus sylvatica (Beech)	7	60	3	3	3	3	1	1(N)	Y	Poor	Suppressed. Major bark wounding on stem. Squirrel damage in crown.Too close to existing building. Severe Squirrel damage.	Remove tree.	<10	U	0.72
T2	Acer pseudoplatanus (Sycamore)	17	640	7	7	5	5	6	7(S)	M	Good	Major deadwood in crown. Crown distorted due to group pressure.	Remove major deadwood.	20+	B1	7.68
T3	Quercus robur (Common Oak)	18	930	7	6.5	5	5	4	4(S)	M	Fair	Decay present at base. Decay present on stem. Cavity on stem.	Fell tree on the grounds of safety. Presence of Laetiporus sulphurous (Chicken of the woods).	10+	U	11.16
T4	Quercus robur (Common Oak)	16	720	7	6.5	5	5	4	4(S)	M	Fair	Declining. Decay present at base. Dieback in crown.	Remove tree. Presence of Laetiporus sulphurous (Chicken of the woods).	10+	U	8.64
T5	Tilia X europaea (Common Lime)	19	590	4.5	4.5	4.5	4.5	2	4(W)	M	Good	Epicormics on stem. Major deadwood in crown.Large piece of concrete/stone at base. If to be removed will require an AMS.	Remove epicormic growth from main stem. Remove major deadwood	40+	A1	7.08

Site: Home Farm, Bradshaw Lane
Surveyed by: Hugh Williams
Date: 10/07/19

Tree Heritage Ltd, 100 North St, Leek, Staffs, ST13 8DQ
T: 01538 384019 E: info@treeheritage.co.uk

Tree Ref.	Species	Height	Stem Diameter	Branch Spread				Crown Clearance	FSB Height + Direction	Life Stage	Phys. Condition	Structural Condition	Recommendations	Estimated Remaining Contribution	Category Grading	RPA Radius
				N	S	E	W									
T6	Quercus robur (Common Oak)	18	860	4	8	6	8	6	7(S)	M	Good	Major deadwood in crown. Unbalanced crown shape. Crown distorted due to group pressure.	Remove due to proximity of adjacent building and potential high risk of branches failing once poor trees to the rear are removed.	20+	B1	10.32
T7	Acer pseudoplatanus (Sycamore)	18	550	6	6	6	6	12	5(S)	M	Poor	Low vitality. Declining. Decay present at base. Decay present on stem. Dieback in crown. Low bud/leaf density. Major deadwood in crown.	Fell tree on the grounds of safety.	<10	U	6.6
T8	Acer pseudoplatanus (Sycamore)	17	400	5	7	4	4	5	6(S)	OM	Poor	Low vitality. Declining. Dieback in crown. Low bud/leaf density. Major deadwood in crown.	Remove tree.	<10	U	4.8
T9	Acer pseudoplatanus (Sycamore)	18	700	5	10	5	5	5	9(S)	M	Fair	Dieback in crown. Low bud/leaf density. Major deadwood in crown.	Remove major deadwood.Reduce lower crown over building to minimise overhang.	20+	B1	8.4

Site: Home Farm, Bradshaw Lane
Surveyed by: Hugh Williams
Date: 10/07/19

Tree Heritage Ltd, 100 North St, Leek, Staffs, ST13 8DQ
T: 01538 384019 E: info@treeheritage.co.uk

Tree Ref.	Species	Height	Stem Diameter	Branch Spread				Crown Clearance	FSB Height + Direction	Life Stage	Phys. Condition	Structural Condition	Recommendations	Estimated Remaining Contribution	Category Grading	RPA Radius
				N	S	E	W									
T10	Fagus sylvatica (Beech)	17	360	4	7	4	4	5	4(S)	EM	Fair	Good condition. Poor shape/form. Suppressed. Unbalanced crown shape. Crown distorted due to group pressure.	No work required.	10+	C1	4.32
T11	Acer pseudoplatanus (Sycamore)	18	450	3	7	3	3	6	7(S)	EM	Poor	Poor shape/form. Declining. Leaning South. Low bud/leaf density. Major deadwood in crown.	Remove tree.	10+	C1	5.4
T12	Acer pseudoplatanus (Sycamore)	18	600	8	8	5	8	7	7(S)	M	Fair	Low vitality. Declining. Low bud/leaf density. Major deadwood in crown.	Remove major deadwood.	10+	C1	7.2
T13	Acer pseudoplatanus (Sycamore)	15	220	0	5	1	5	4	3(S)	EM	Poor	Poor shape/form. Low vitality. Crown distorted due to group pressure.	Remove tree.	10+	C1	2.64
T14	Acer pseudoplatanus (Sycamore)	16	400	2	8	3	4	7	7(S)	M	Fair	Low vitality. Declining. Low bud/leaf density. Major deadwood in crown. Low crown.	Crown lift to 5m.	10+	C1	4.8

Site: Home Farm, Bradshaw Lane
Surveyed by: Hugh Williams
Date: 10/07/19

Tree Heritage Ltd, 100 North St, Leek, Staffs, ST13 8DQ
T: 01538 384019 E: info@treeheritage.co.uk

Tree Ref.	Species	Height	Stem Diameter	Branch Spread				Crown Clearance	FSB Height + Direction	Life Stage	Phys. Condition	Structural Condition	Recommendations	Estimated Remaining Contribution	Category Grading	RPA Radius
				N	S	E	W									
T15	Fagus sylvatica (Beech)	12	190	4	2	4	4	4	4(E)	EM	Fair	Poor shape/form. Spindly habit. Suppressed.	Remove tree.	10+	C1	2.28
T16	Acer pseudoplatanus (Sycamore)	17	450	7	7	7	7	3	7(S)	M	Poor	Decay present at base. Ivy on stem.	Fell tree on the grounds of safety.	<10	U	5.4
T17	Acer pseudoplatanus (Sycamore)	20	740	4	9	8	7	4	6(S)	M	Good	Major deadwood in crown. Low crown over site.	Remove major deadwood. Prune clear of building.Raise crown over site to leave 3 metres clearance from buildings.	40+	A1	8.88
T18	Acer pseudoplatanus (Sycamore)	18	550	6	6	6	6	14	15(N)	M	Fair	Low vitality. Declining. Ivy on stem. Major deadwood in crown.	Remove to allow adjacent tree to mature.	10+	C1	6.6
T19	Fagus sylvatica (Beech)	14	200	5	5	5	5	4	4(S)	EM	Fair	Suppressed.	No work required.	10+	C1	2.4
T20	Fagus sylvatica (Beech)	20	650	5	8	7	7	5	5(S)	M	Fair	Hanging branch/es in crown. Major deadwood in crown. Crown distorted due to group pressure. Squirrel damage in crown.	Remove broken/damaged branch/es. Remove major deadwood.	20+	B1	7.8

Appendix B i

Figure 2 – Default specification for protective barrier

Figure 2 **Default specification for protective barrier**

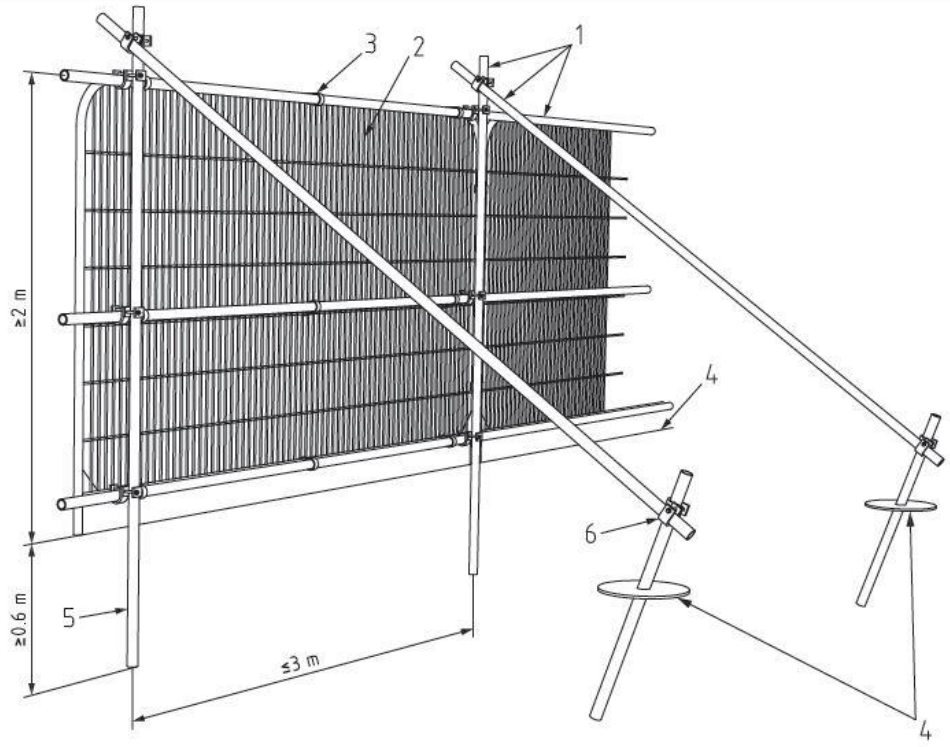

Key

1 Standard scaffold poles
2 Heavy gauge 2 m tall galvanized tube and welded mesh infill panels
3 Panels secured to uprights and cross-members with wire ties
4 Ground level
5 Uprights driven into the ground until secure (minimum depth 0.6 m)
6 Standard scaffold clamps

Appendix B ii

Figure 3 – Scaffolding within the Root Protection Areas

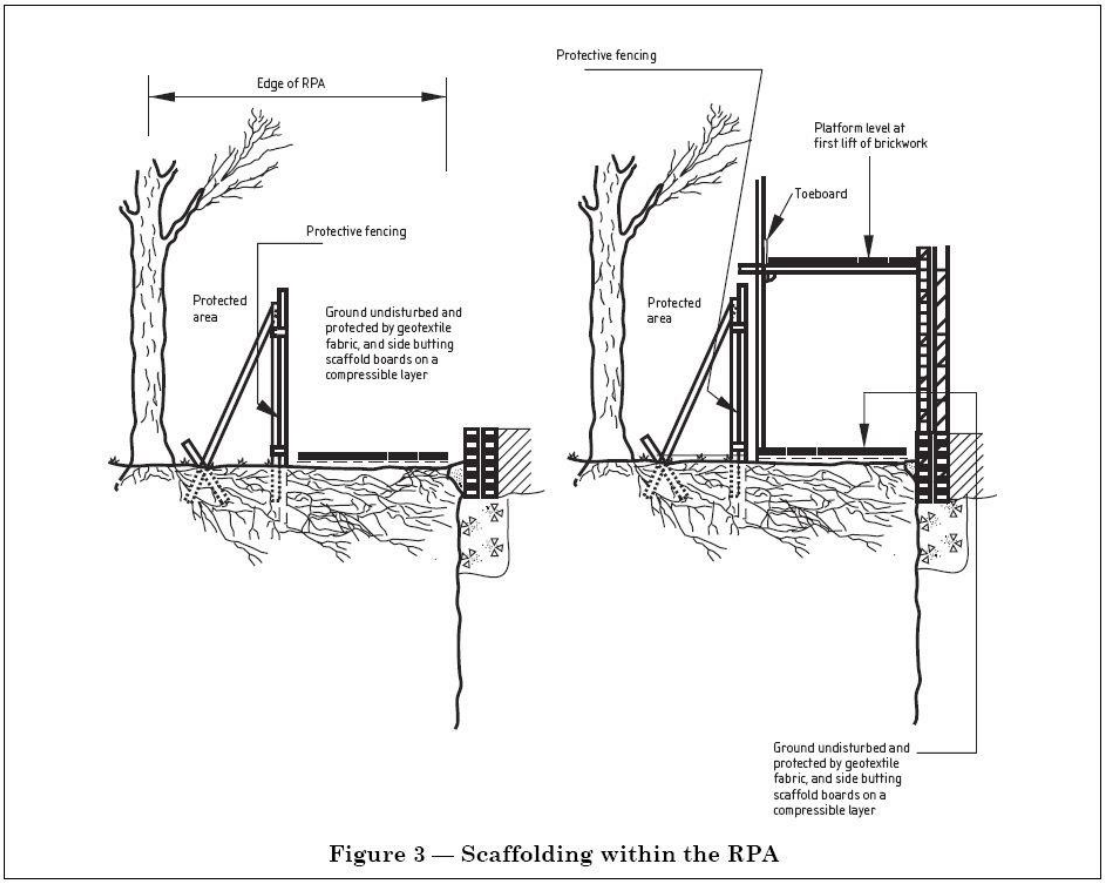

Figure 3 — Scaffolding within the RPA



PROTECTIVE FENCING. THIS FENCING MUST BE MAINTAINED IN ACCORDANCE WITH THE APPROVED PLANS AND DRAWINGS FOR THIS DEVELOPMENT.



TREE PROTECTION AREA
KEEP OUT !

TREES ENCLOSED BY THIS FENCE ARE PROTECTED BY PLANNING CONDITIONS

ANY INCURSION INTO THE PROTECTED AREA MUST BE WITH THE WRITTEN PERMISSION OF THE LOCAL PLANNING AUTHORITY

0 2 4 6 8 10m
1:200

T18-Sycamore
T19-Beech
T20-Beech
T15-Beech
T16-Sycamore
T17-Sycamore
T14-Sycamore
T12-Sycamore
T13-Sycamore
T11-Sycamore
T10-Beech
T9-Sycamore
T8-Sycamore
T7-Sycamore
T5-Common Lime
T6-Common Oak
T4-Common Oak
T3-Common Oak
T2-Sycamore
T1-Beech

Building 1
Building 2
Building 3
Concrete
Gate
Elevation 1
Elevation 2
Elevation 3
Elevation 4
Elevation 5
Elevation 6

Notes:

1. Contractors are advised to check all dimensions against the tree schedule. Tree canopies are symbolic only and are representative of the average spread; this may not represent the true outline. Note that the tree stem may not sit centrally to canopy. Tree stems are symbolic only and are representative of the tree category; this does not represent the stem diameter - see schedule for details.
2. The original of this drawing was produced in colour - a monochrome copy should not be relied upon.

Rev:	Date:	Status/Amendments:	By:

Key:

- Category A Tree / Group
- Category B Tree / Group
- Category C Tree / Group
- Category U Tree / Group
- Branch Spread
- Tree to be Removed
- Root Protection Area (RPA)
- First Significant Branch Direction
- Root Protective Barrier
- Special Measures
- Tree Shadow

GROWING SINCE ● 1982
TREE HERITAGE
Tree Heritage Ltd, 100 North Street,
Leek, Staffordshire, ST13 8DQ
Telephone: 01538 384019
treeheritage.co.uk ● info@treeheritage.co.uk

Client:
Mr P. Hammonds

Project:
Home Farm, Bradshaw Lane

Drawing Title:
Tree Constraints Plan

Scale:	Paper Size:
1:200	A1
Drawing Number:	Date Created:
THL-0779	10/07/19

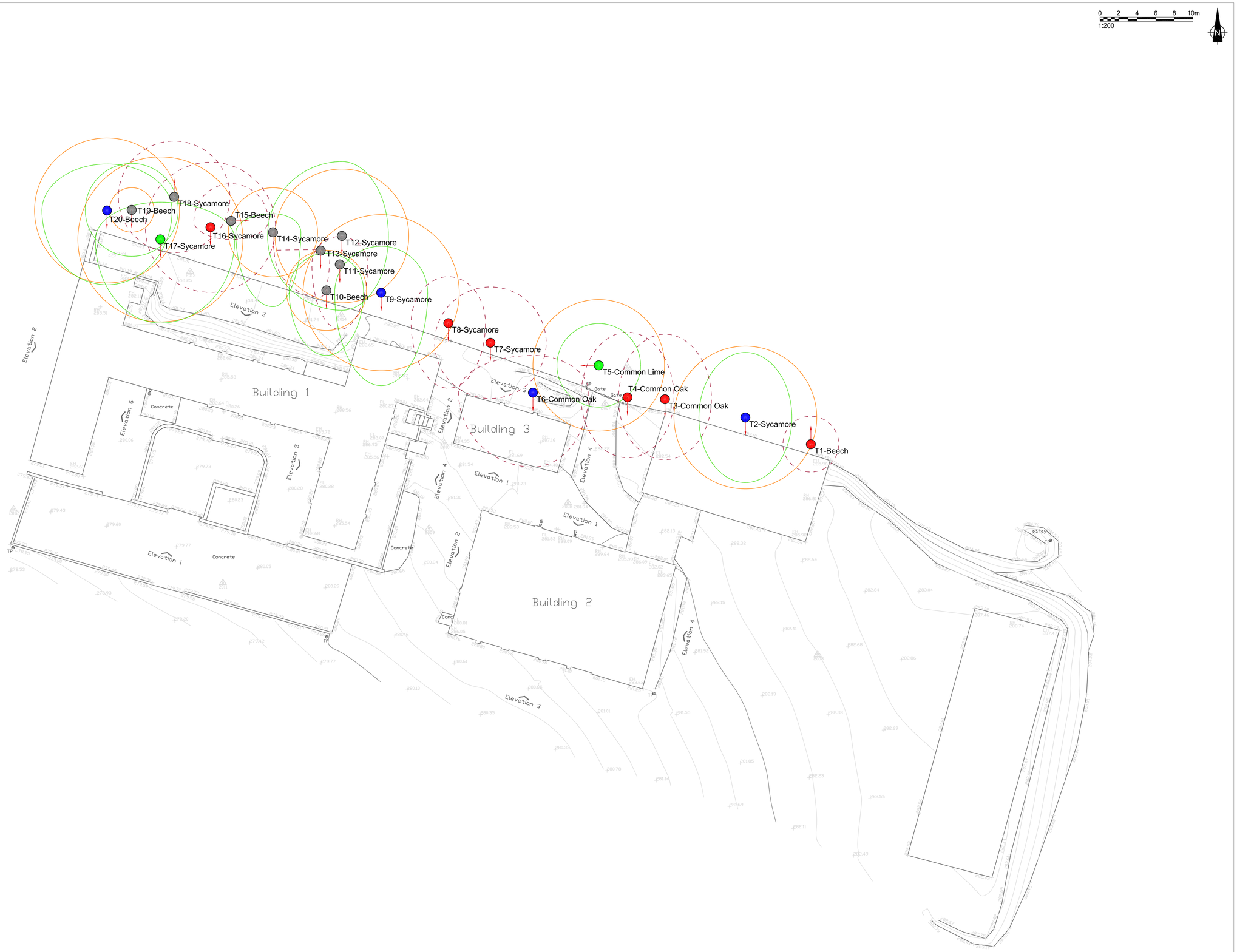

Notes:

1. Contractors are advised to check all dimensions against the tree schedule. Tree canopies are symbolic only and are representative of the average spread; this may not represent the true outline. Note that the tree stem may not sit centrally to canopy. Tree stems are symbolic only and are representative of the tree category; this does not represent the stem diameter - see schedule for details.
2. The original of this drawing was produced in colour - a monochrome copy should not be relied upon.

Rev:	Date:	Status/Amendments:	By:

Key:

- Category A Tree / Group
- Category B Tree / Group
- Category C Tree / Group
- Category U Tree / Group
- Branch Spread
- Tree to be Removed
- Root Protection Area (RPA)
- First Significant Branch Direction
- Root Protective Barrier
- Special Measures
- Tree Shadow

GROWING SINCE 1982
TREE HERITAGE
Tree Heritage Ltd, 100 North Street,
Leek, Staffordshire, ST13 8DQ
Telephone: 01538 384019
treeheritage.co.uk • info@treeheritage.co.uk

Client:
Mr P. Hammonds

Project:
Home Farm, Bradshaw Lane

Drawing Title:
Arboricultural Impact Assessment

Scale:	Paper Size:
1:200	A1
Drawing Number:	Date Created:
THL-0779-2	11/07/19

0 2 4 6 8 10m
1:200

Tree protective barrier to be offset to allow for scaffolding within the RPA's. Ground protection to be used in areas highlighted yellow.

Standard tree protective barrier to be positioned along existing access road and drive

T19-Beech
T20-Beech
T17-Sycamore
T14-Sycamore
T12-Sycamore
T10-Beech
T9-Sycamore
T5-Common Lime
T2-Sycamore

Building 1
Building 2
Building 3

Concrete

Figure 2 **Default specification for protective barrier**

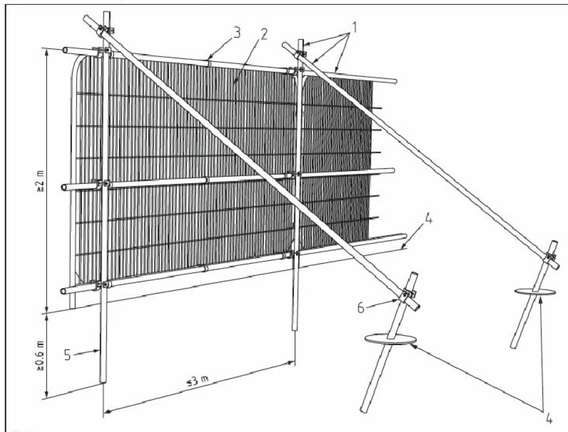

Key

1 Standard scaffold poles
2 Heavy gauge 2 m tall galvanized tube and welded mesh infill panels
3 Panels secured to uprights and cross-members with wire ties
4 Ground level
5 Uprights driven into the ground until secure (minimum depth 0.6 m)
6 Standard scaffold clamps

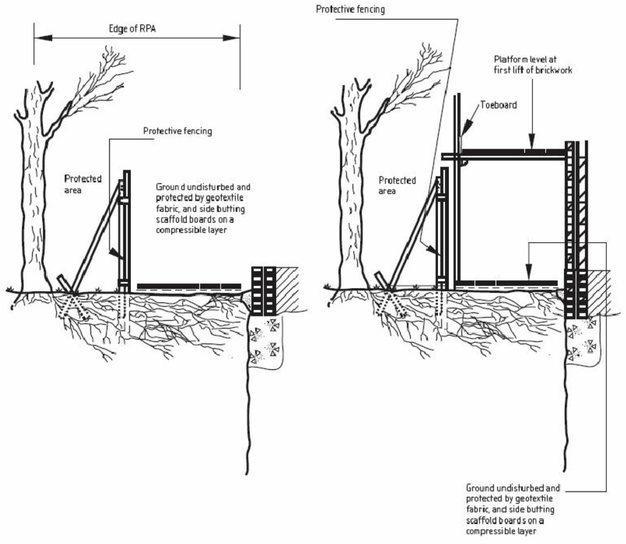

Figure 3 — Scaffolding within the RPA

Tree Ref.	RPA Radius (Metres)
T2	7.68
T5	7.08
T9	8.4
T10	4.32
T12	7.2
T14	4.8
T17	8.88
T19	2.4
T20	7.8

Notes:

1. Contractors are advised to check all dimensions against the tree schedule. Tree canopies are symbolic only and are representative of the average spread; this may not represent the true outline. Note that the tree stem may not sit centrally to canopy. Tree stems are symbolic only and are representative of the tree category; this does not represent the stem diameter - see schedule for details.
2. The original of this drawing was produced in colour - a monochrome copy should not be relied upon.

Rev:	Date:	Status/Amendments:	By:

Key:

- Category A Tree / Group
- Category B Tree / Group
- Category C Tree / Group
- Category U Tree / Group
- Branch Spread
- Tree to be Removed
- Root Protection Area (RPA)
- First Significant Branch Direction
- Root Protective Barrier
- Special Measures
- Tree Shadow

GROWING SINCE ● 1982
TREE HERITAGE
Tree Heritage Ltd, 100 North Street,
Leek, Staffordshire, ST13 8DQ
Telephone: 01538 384019
treeheritage.co.uk ● info@treeheritage.co.uk

Client: Mr P. Hammonds

Project: Home Farm, Bradshaw Lane

Drawing Title: Tree Protection Plan

Scale:	*Paper Size:*
1:200	A1
Drawing Number: THL-0779-3	*Date Created:* 11/07/19