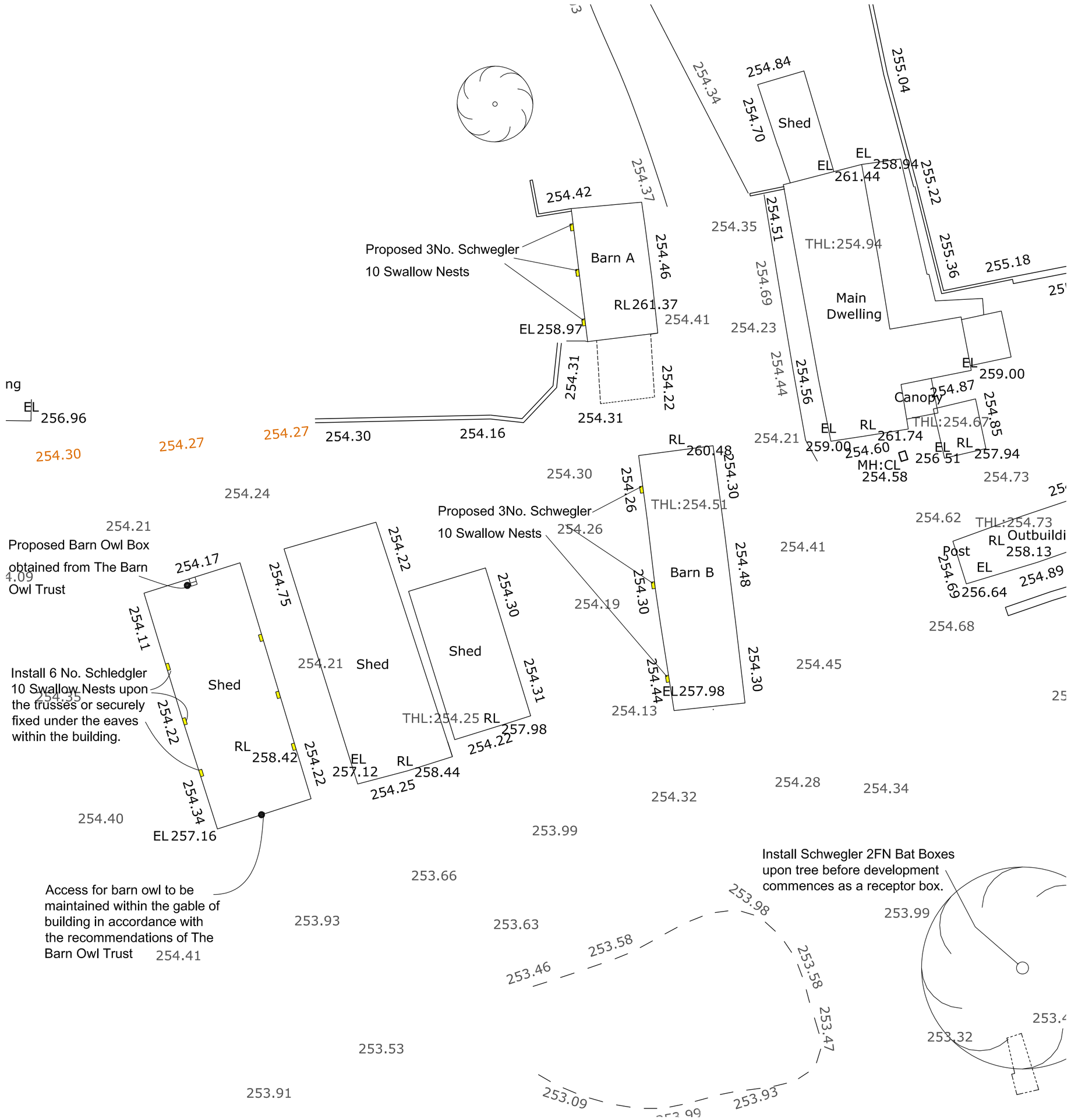

Block Plan scale 1:200 @ A1



Photograph of Proposed Barn Owl Box

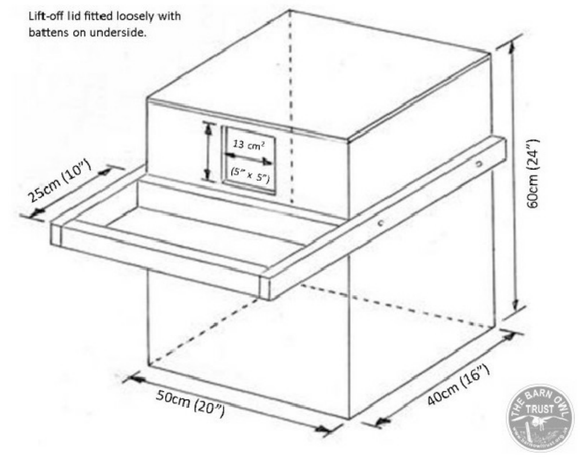

Dimensions of Proposed Barn Owl Box NOT TO SCALE

Install 1No. Barn Owl Box within the outbuilding with the opening at least 3 metres above ground level where the nest box is visible from the most likely entrance point.



Details of Scwegler 10 Swallow Nests

Install 6No. Schwegler swallow nests within the outbuilding preferably secured to roof trusses or alternatively 400mm beneath the eaves with a clear flight path from the the most likely entrance and a further 6No.beneath the eaves of Barns A&B with a clear flight path from the the most likely entrance. Provide aluminium canopy 50mm above top of swallow nests where fitted externally which are to extend to sides and front to provide shelter to nest from rain.

Provide ridge tiles for Bats in accordance with Charnia Ecology supplementary bat and bird mitigation report

Provide and install a Schwegler 2FN receptor box upon the tree before the works commence for use in the event roosting bats are encountered during the works being carried out.

The works are to be carried out in accordance with the details specified within the Charnia Ecology report for this project.

0.0m 2.0m 4.0m 6.0m 8.0m 10.0m 12.0m 14.0m 16.0m 18.0m 20.0m
Scale bar @ 1:200

Rev.	Drawn	Comments.	Date
C		Additional swallows nests added with canoples	11.07.19

MAC
ARCHITECTURAL DESIGN LTD
Moorland House, 123 Moorland Road, Burslem, ST6 1JD.
T:01782 503302 E:admin@mac-arch.co.uk

Client:
Mr & Mrs J Harrison

Project:
Proposed Barn Conversions at
Apesford Farm, Apesford,
Nr. Bradnop, Leek, Staffordshire.

Title:
Ecology Enhancement Details

Status:
Planning.

Paper Size: A1 Date: January 2019 Drawing Ref: 1571-AL08C