Ref: SMD/2019/0214

CONCRETE POSTS AND GRAVEL BOARDS WITH 1800 M X 1·500M TIMBER PANELS

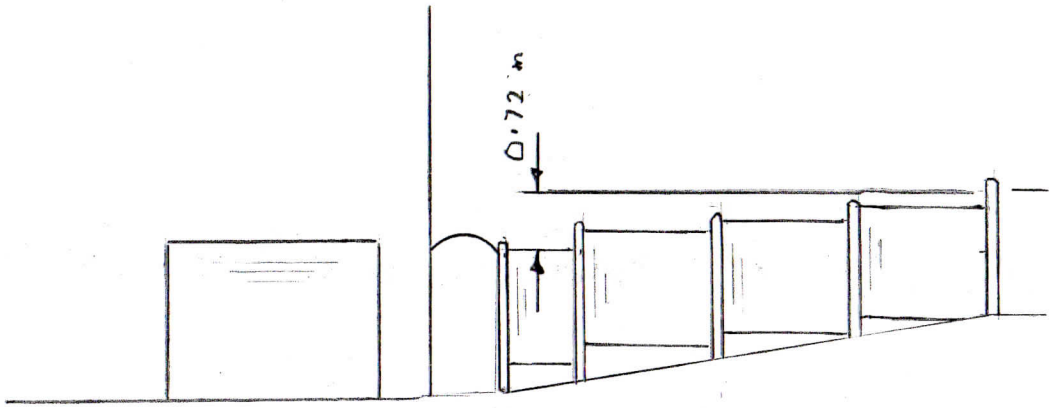

FRONT ELEVATION FROM SHARED DRIVE (EAST) SCALE 1:100

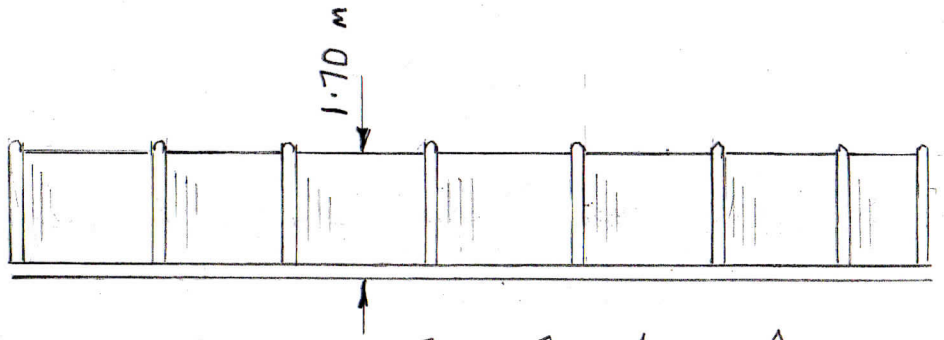

SIDE ELEVATION FROM OAK MOUNT ROAD (NORTH WEST) SCALE 1:100

MRS D LYCETT
5 OAK MOUNT ROAD
WERRINGTON

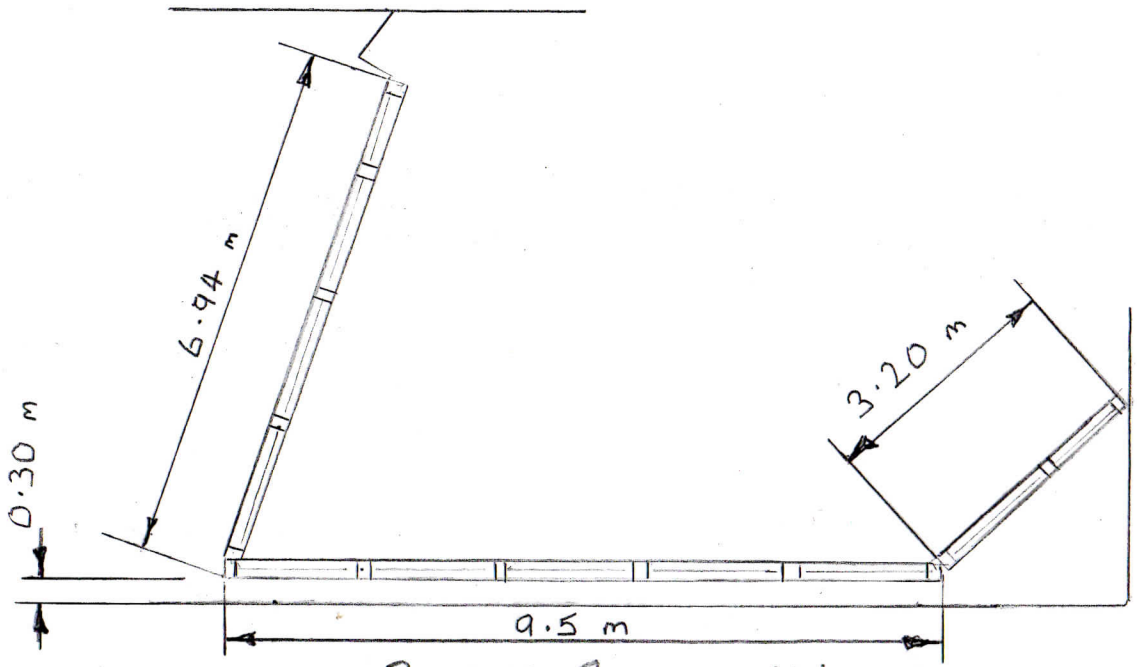

PLAN SCALE 1:100