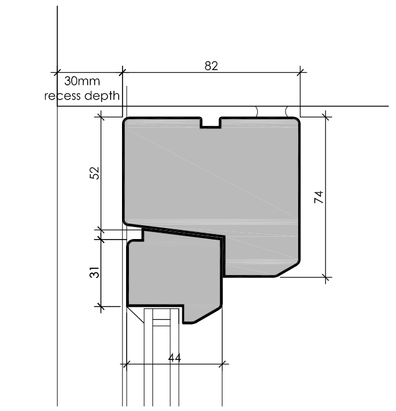

Detail A 1:2

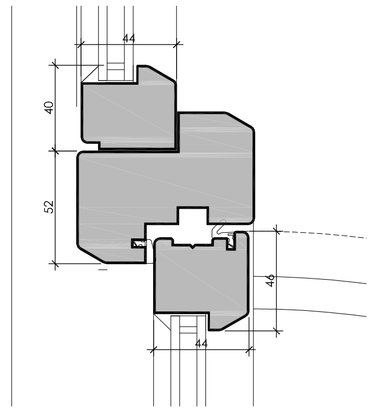

Detail B 1:2

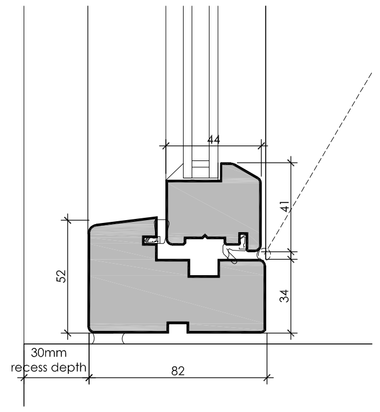

Detail C 1:2

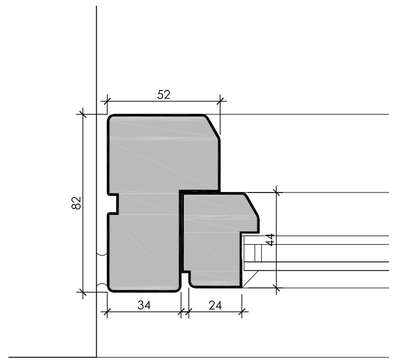

Detail D 1:2

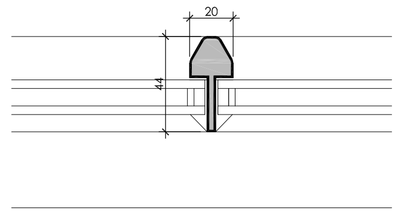

Detail E 1:2

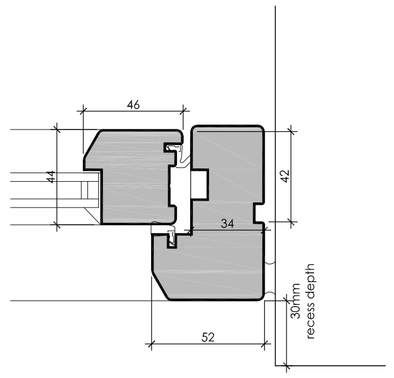

Detail F 1:2

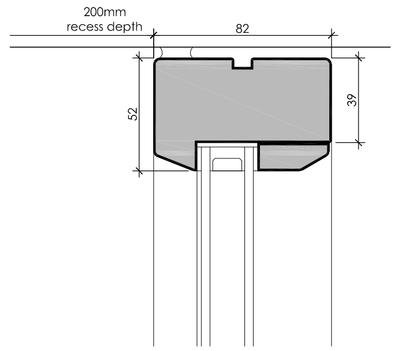

Detail G 1:2

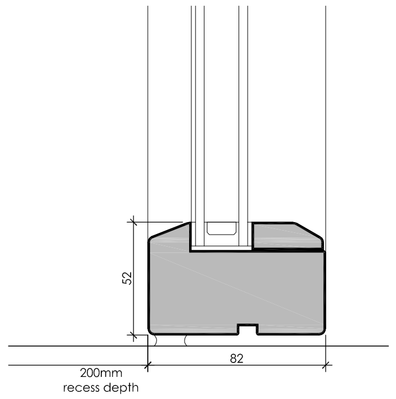

Detail H 1:2

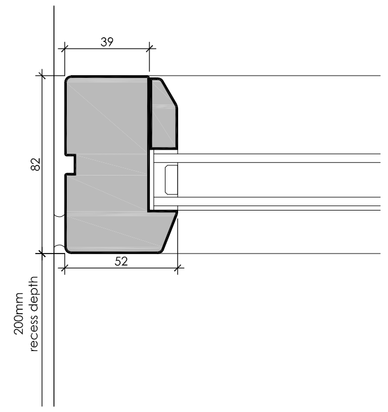

Detail I 1:2

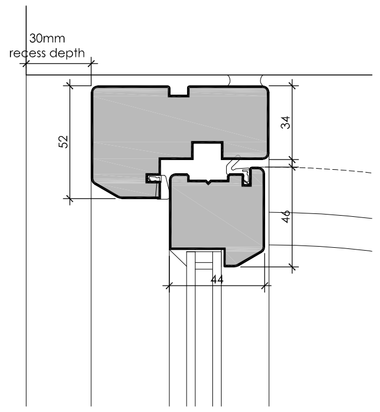

Detail J 1:2

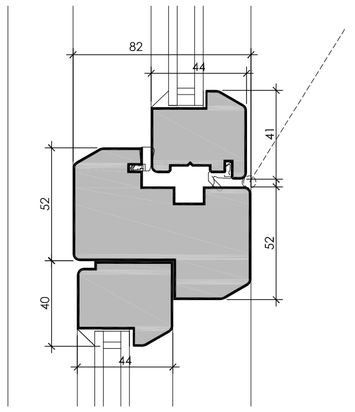

Detail K 1:2

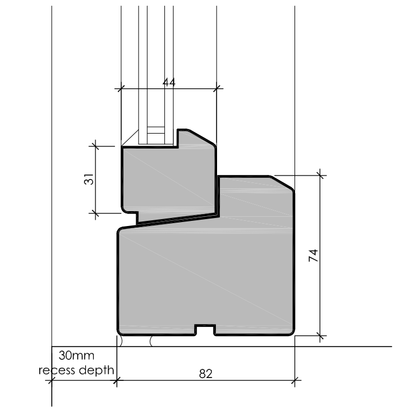

Detail L 1:2

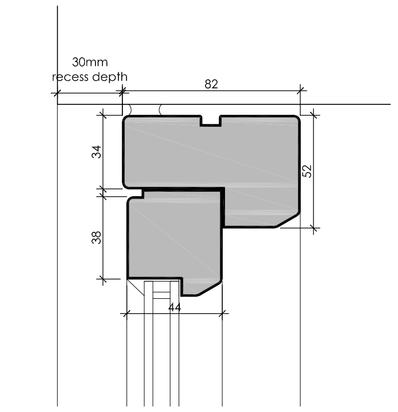

Detail M 1:2

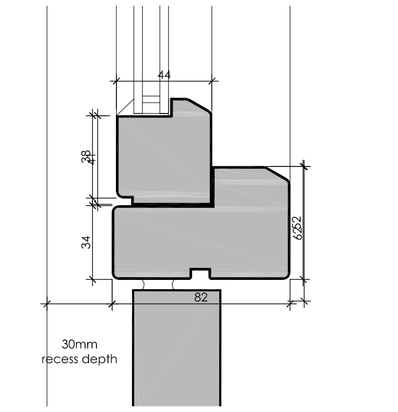

Detail N 1:2

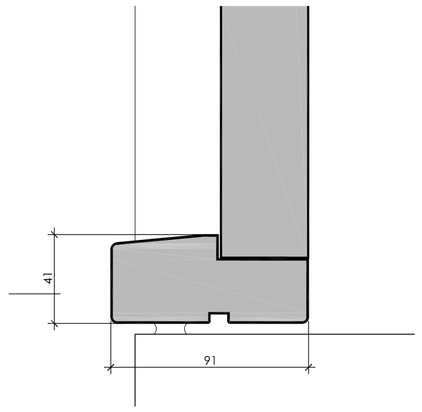

Detail O 1:2

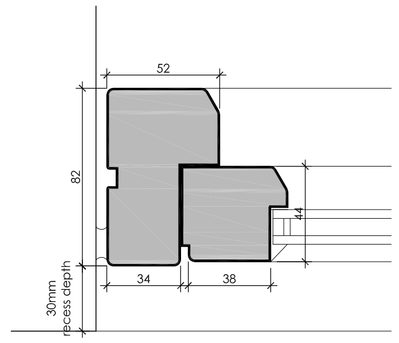

Detail P 1:2

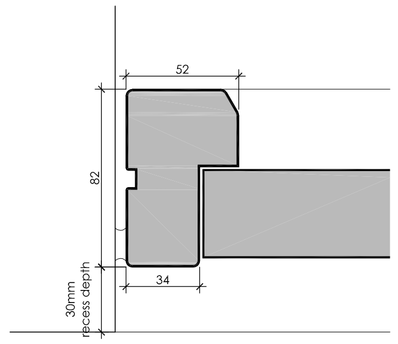

Detail Q 1:2

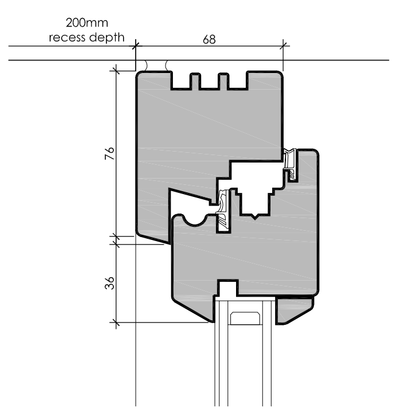

Detail R 1:2

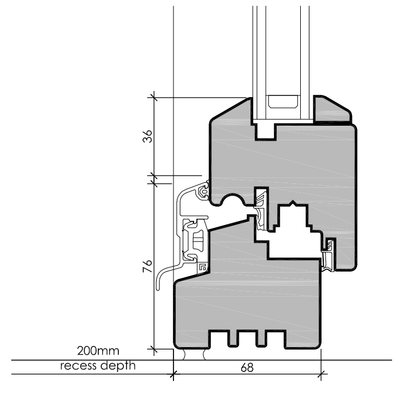

Detail S 1:2

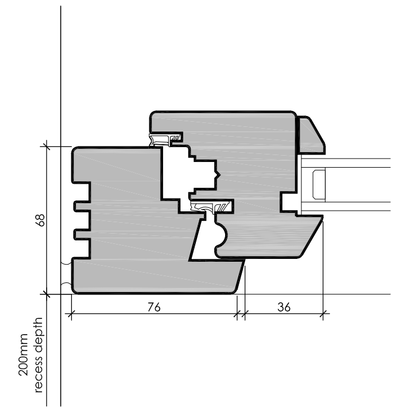

Detail T 1:2

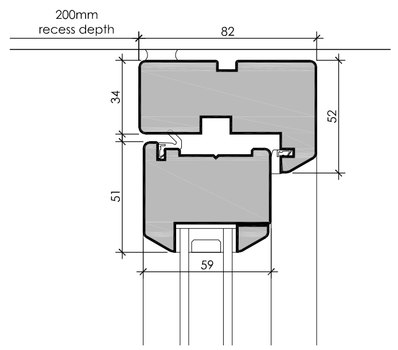

Detail U 1:2

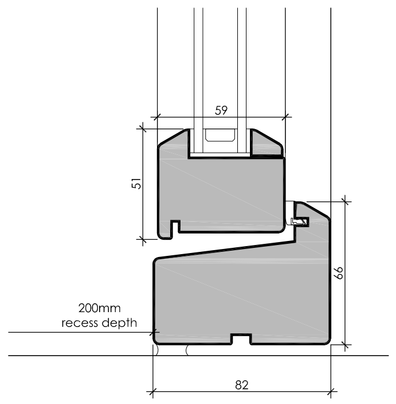

Detail V 1:2

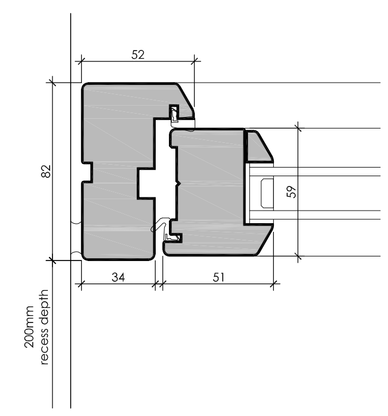

Detail W 1:2

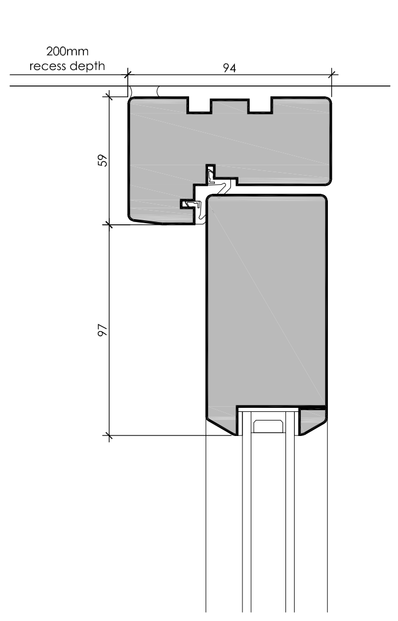

Detail X 1:2

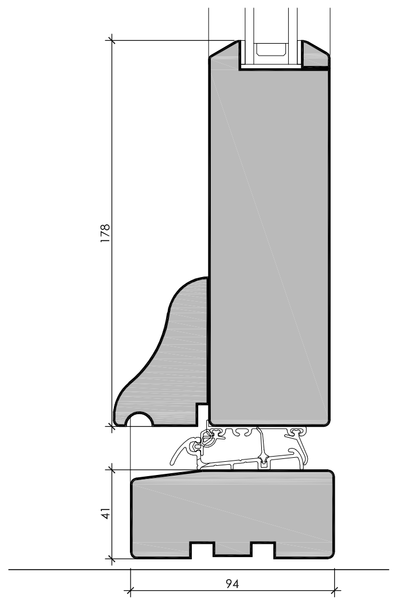

Detail Y 1:2

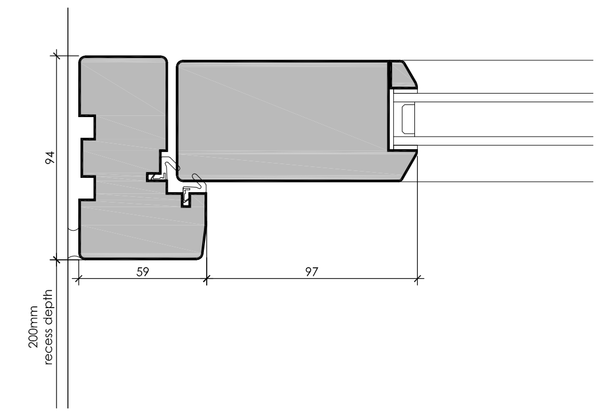

Detail Z 1:2

Copyright of this drawing is vested in the Architect and it must not be copied or reproduced without consent. Figured dimensions only are to be taken from this drawing. All contractors must visit the site and be responsible for taking and checking all dimensions relative to their work. Hewitt&Carr Architects Ltd are to be advised of any variation between drawings and site conditions.
CLIENTS ARE ADVISED TO CLARIFY DIMENSIONS WITH THE ARCHITECT PRIOR TO SETTING OUT AND NOT TO SCALE FROM THE DRAWING

Rev.	Drawn	Comments	Date

Windows W1.01, 1.03, 1.04, 1.06 & 1.08 and all shutters to be assessed for suitability and repaired in like-for-like materials/profiles wherever appropriate, utilising single pane glazing held in place with linseed oil putty. If beyond repair, new frames should aim to recreate the existing profile to receive 14mm Heritage slimline double glazed units with max. 20mm true glazing bars and 8mm sight line, utilising float glass held in place with linseed oil putty. 30mm recess depth of frame is approximate - the frame should be positioned with a recess depth to match the recess depth of the current window.

All other openings (with the exception of W1.09) to receive 24mm double glazed units utilising float glass with timber beads internally. Set back a minimum 200mm within the reveal to minimise external reflection and appearance.

Additional hidden support steel lintels/plates may be required to strengthen & support damaged/inadequate lintels or stone lintel to be replaced with new stone lintels to match existing. All with Conservation Officers prior agreement.

Windows to be fitted with butt hinges complete with traditional window stay and casement fasteners. All joinery to be primed and finished in paint colour - RAL 7032 Pebble Grey

Dimensions of openings are indicative only and must be checked on site prior to ordering. Window details may require further clarification from window manufacturer, and details approved by Conservation Officer, prior to window manufacture.

F.L. - Window with fixed casement.
O.C. -Window with opening casement.

DETAILS FOR BARN 1 ONLY

Drawings to be read in conjunction with 00875 AL(0)10, AL(0)11 & AC(3)01.

Hewitt&CarrArchitects
A: DaisyBank House | 17-19 Leek Road | Cheadle | ST10 1JE
T: 01538 756888
E: enquiries@hcarchitects.co.uk
W: www.hcarchitects.co.uk

Client
Mr N Sutton

Project
Conversion of Listed Barns to Residential Units
Lower Farm, Consall

Title
Barn 1 Joinery Details

Status
Detailed Drawings

Date April 2019
Drawn KEW
Scale @A1 1:2
Checked

Project No 00875
Drawing No. AC(3)02
Rev

File Ref: H:\REF