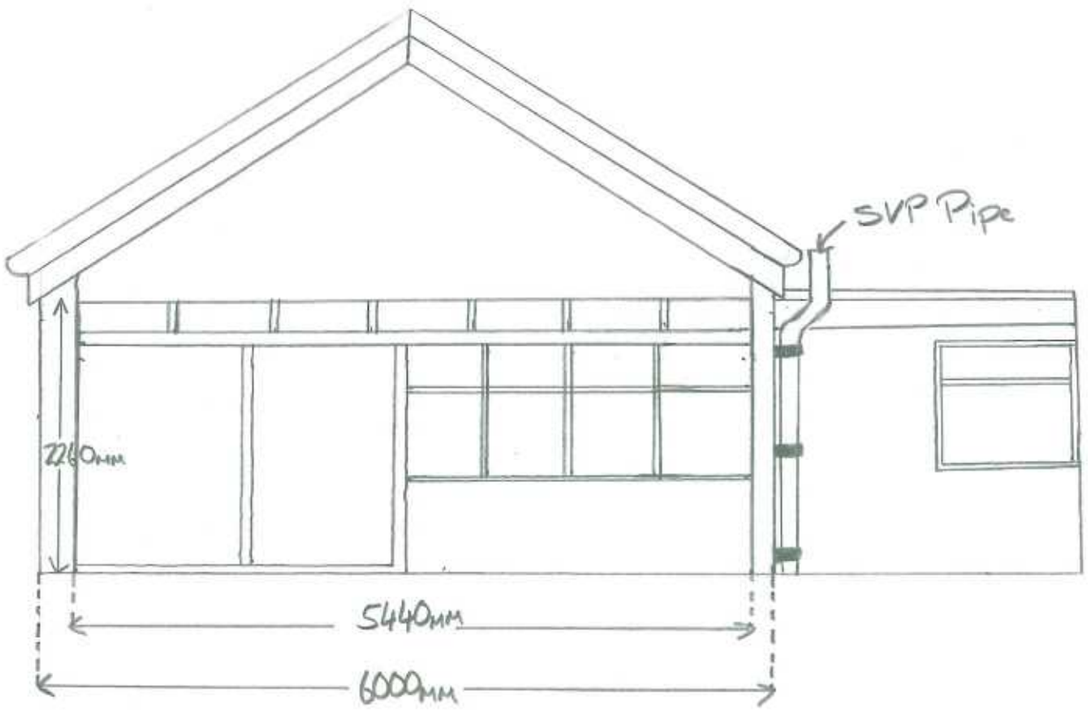

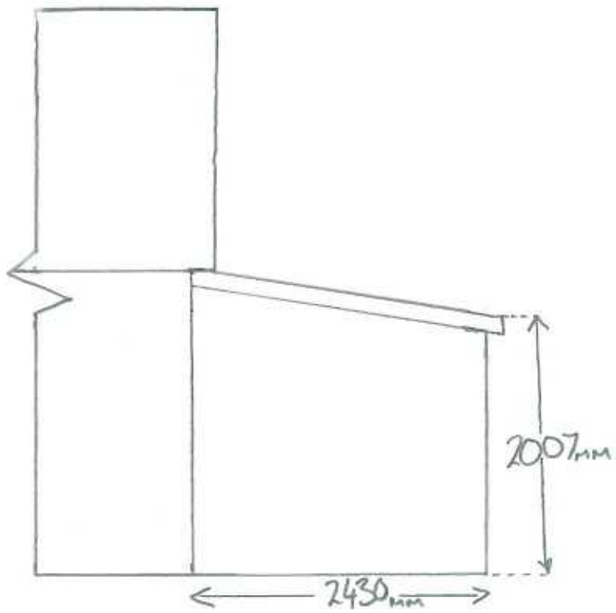

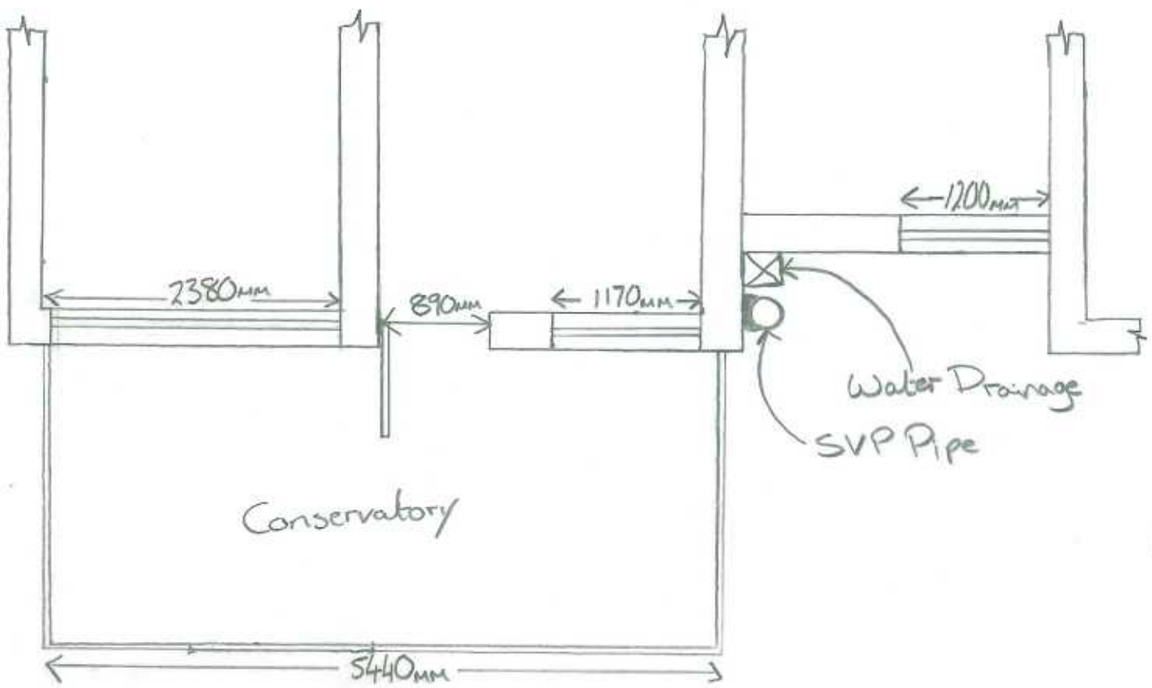

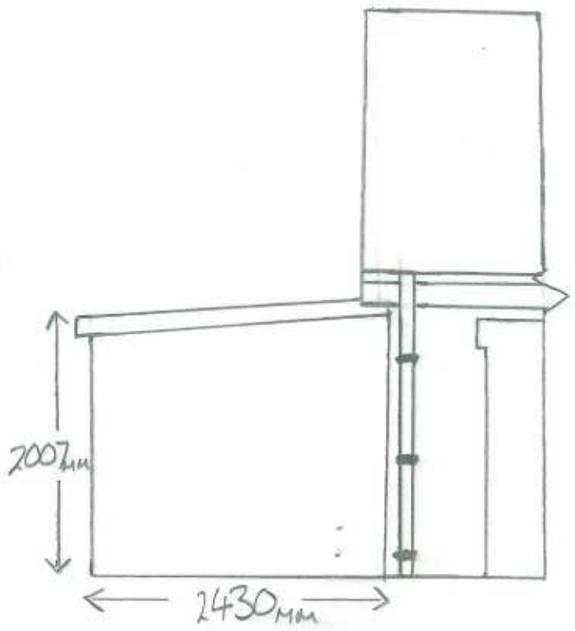

Scale 1:50@A3

Plans and Elevation as Existing

Mr Mark Whitehouse
20 Meadow Way
Tean
Stoke On Trent
ST10 4EF

Rear Extension