0 0.50 1.00 1.50 2.00 2.50 3.00 3.50 4.00 4.50 5.00 5.50

Scale to be measured



Proposed Front Elevation

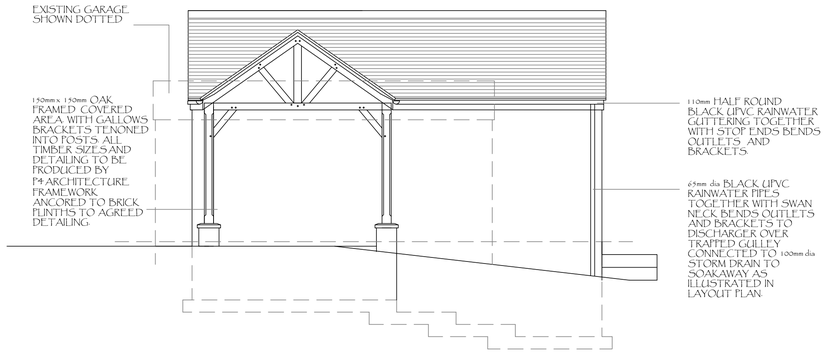

Proposed Side Elevation

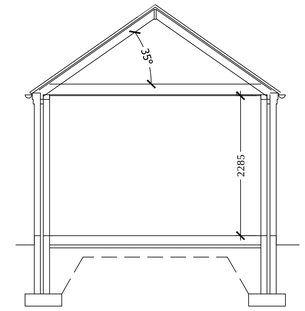

Section AA

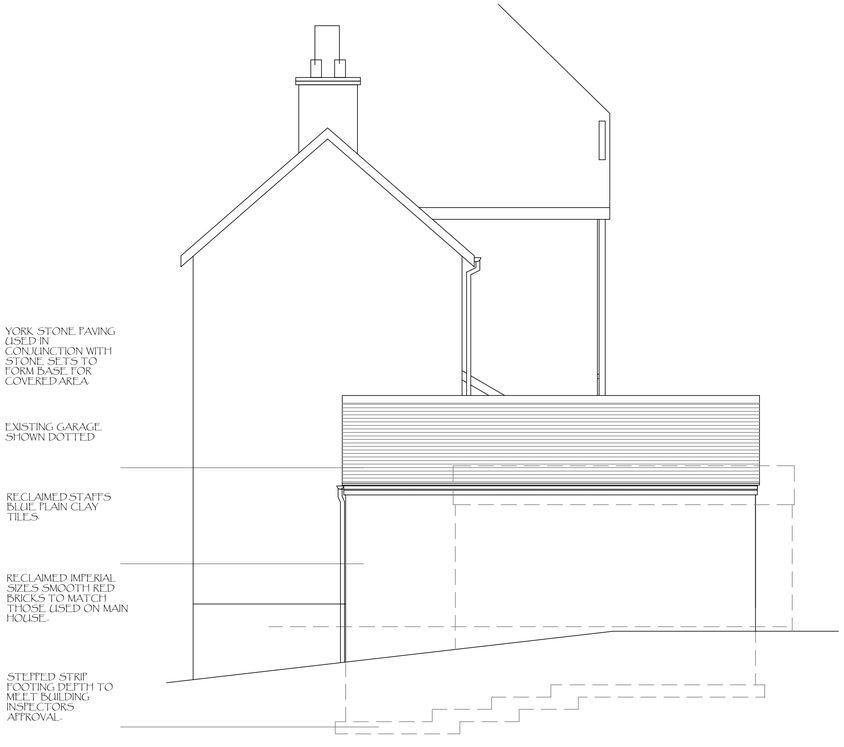

Proposed Side Elevation

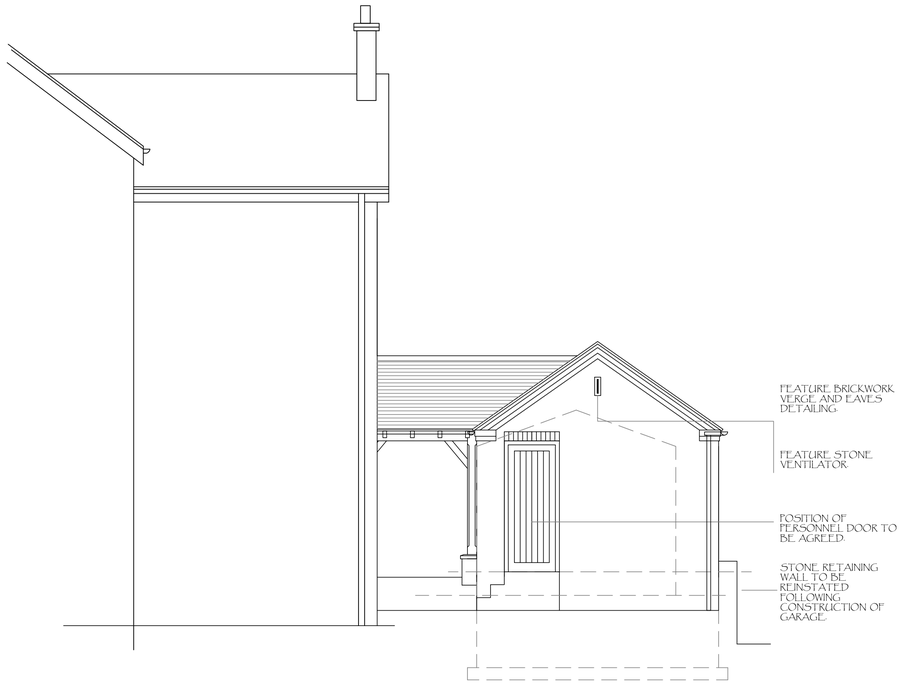

Proposed Rear Elevation

REV	DATE	DESCRIPTION

DRAWING STATUS

PLANNING

THIS DRAWING IS COPYRIGHT AND MUST NOT BE REPRODUCED IN WHOLE OR IN PART WITHOUT THE PRIOR PERMISSION OF P4 Architecture.

DIMENSIONS TO BE VERIFIED ON SITE. ONLY FIGURED DIMENSIONS TO BE USED AND ANY DISCREPANCY BETWEEN THIS DRAWING AND SITE CONDITIONS TO BE REFERRED TO P4 Architecture IMMEDIATELY. NO DIMENSIONS ARE TO BE SCALED OFF PRINTED DRAWINGS. ANY AREAS THAT ARE INDICATED ON THIS DRAWING ARE FOR GUIDANCE ONLY. NO RESPONSIBILITY IS TAKEN FOR THEIR ACCURACY

THERE IS A RISK OF DEATH OR INJURY IN CONSTRUCTION IF THE WORKS ARE NOT PROPERLY PLANNED AND SUPERVISED. THE CONTRACTOR MUST NOT UNDERTAKE ANY ELEMENT OF WORK WITHOUT HAVING FIRST CARRIED OUT THE NECESSARY RISK ASSESSMENT AND PREPARED DETAILED METHOD STATEMENT.

CLIENT

Mr A. & Mrs D. Alcock

PROJECT

Proposed Replacement Garage and Covered Area at Lyndhurst Sutherland Road Longsdon Leek, Staffs.

DRAWING TITLE

Proposed Elevations

SCALE	DATE
1:50 @ A1	February 2019

DRAWING No. **ADAL /PP/02/002** REV

P4 Architecture

P4 Architecture
A Member of the Chartered Institute of Architectural Technologists

Chartered Institute of Architectural Technologists

Architectural & Construction Project Management Services

Tel. 07962 062 618 Email. P4architecture@hotmail.co.uk