

Existing Plan
1:100

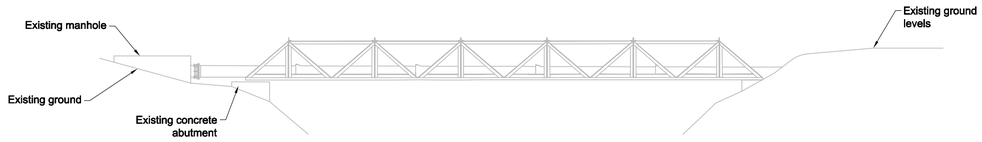

Existing Elevation
1:100

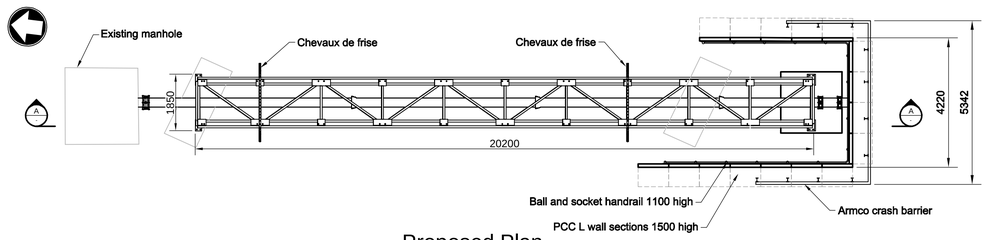

Proposed Plan
1:100

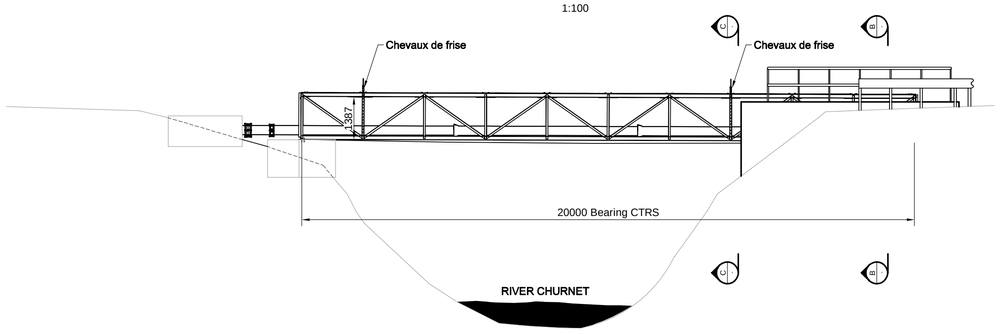

Proposed Elevation
1:100

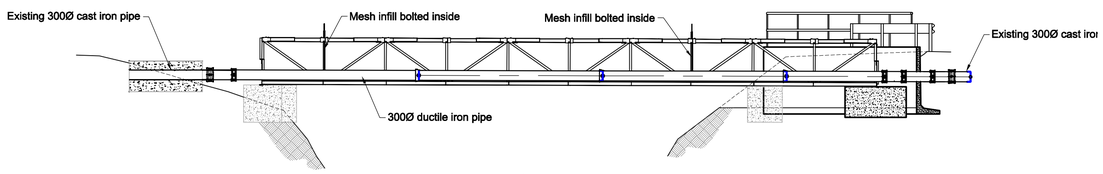

Section A-A
1:100

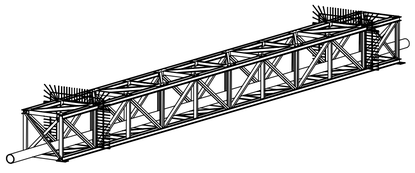

Isometric View
NTS

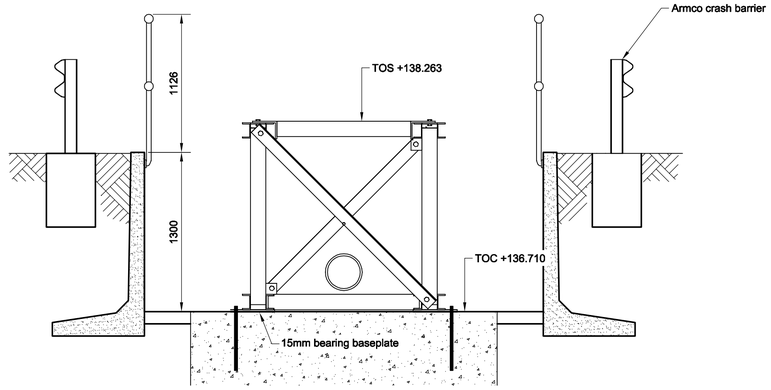

Section B - B
1:25

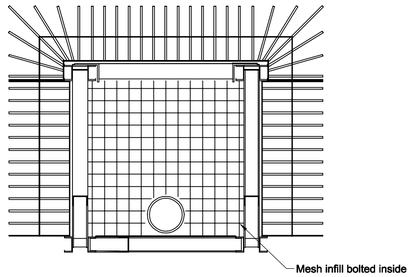

Section C - C
1:25

© Mott MacDonald Bentley Limited

This document should not be relied on or used in circumstances other than those for which it was originally prepared and for which Mott MacDonald Bentley Ltd was commissioned. Mott MacDonald Bentley Ltd accepts no responsibility for this document to any other party other than the person by whom it was commissioned.

The material contained in this drawing has been based upon the Ordnance Survey map by Severn Trent Water Limited by permission of Ordnance Survey on behalf of the Controller of Her Majesty's Stationary Office.

© Crown Copyright - Severn Trent Water Limited - Licence number - WU298522.

Document users other than Severn Trent Water Business users, are advised that this document is provided for reference purposes only and no further copies should be made from it.

Purpose of issue

PLANNING

Residual & Operational Risk Assesment (Health, Safety and Environmental)

Wherever possible, risk is designed-out of this proposal during the design process. Where this is not possible, the risk will be minimised and any residual risk will be noted and indicated by the appropriate symbol.

Refer to the Construction Pack for Hazard triangle key.

Refer to the PCI Summary for details of the hazards shown.

Notes

1. This drawing to be read in conjunction with all relevant drawings as listed below.
2. All dimensions are shown in millimetres (mm), unless noted otherwise.
3. All levels are shown in metres (m) relative to AOD, unless noted otherwise.
4. No dimensions are to be scaled from this drawing.

Key to symbols

- Existing
- Hidden
- Proposed
- Section through soil
- Section through concrete
- Section through precast concrete

Reference drawings

A6S11789-PA00100 Location Plan
A6S11789-PA00101 Existing Plan
A6S11789-PA00102 Proposed Plan

Scale reference

1:100 — 0 — 5m — 10m

1:25 — 0 — 1.25m — 2.5m

Rev	Date	Description	Author	T. Chk	B.Chk	App'd
E	19/03/19	Minor Changes	SJW	RL	MB	SM
D	11/03/19	Landscaping Details Shown	SJW	RL	MB	SM
C	28/02/19	Bridge Structure Changes	VG	SW	-	SM
B	19/12/18	Minor Changes	RL	SG	-	SM
A	14/11/18	First Issue	RL	SG	-	SM

SEVERN TRENT

MMB MOTT MACDONALD BENTLEY

One Supply Chain - Delivery Team

Telephone - 01952 468210
Facsimile - 01952 468211
E-mail - info@mm-b.co.uk
Website - www.mottmacbentley.co.uk/mmb

Lamledge Lane,
Shifnal,
Shropshire,
TF11 8SD

Title

Cheddleton Pipe Bridge
Proposed Pipe Bridge

Plan & Elevation

Site Address : Cheddleton Pipe Bridge, ST13 7EE

OS Grid Ref : SJ97376 52539

Scale at A1: As Shown

MMB File Ref: A6S11789-PC00103

File Location: pw/HS51

Drawing No: A6S11789-PC00103

Rev: E

Status: PLA