

Horizontal timber boarded and framed shed wall construction

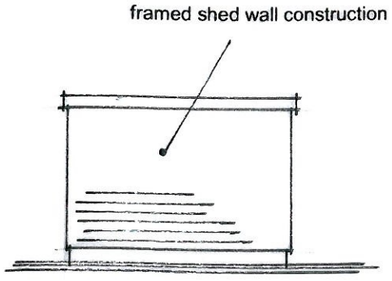

WEST ELEVATION
(Facing St Edwards Rd)

single glazed window

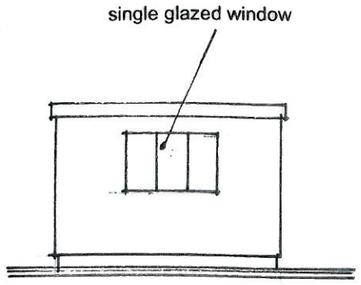

EAST ELEVATION
(Facing Garden)

SCALE 1:100

0m 1m 2m 3m 4m 5m 6m 7m 8m 9m 10m

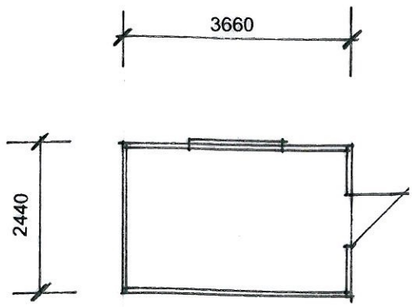

PLAN LAYOUT

Single width hinged door

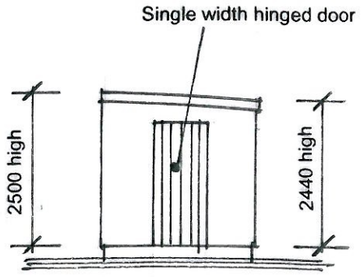

SOUTH ELEVATION
(Facing Ext'g Dwelling)

Pent style mono pitched garden shed with felted roof

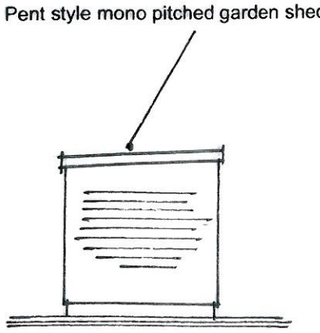

NORTH ELEVATION
(Facing to neighbour)

HARRISON WOOD

UNIT 3 STUDIO 2,
SILVERDALE ENTERPRISE CENTRE,
SILVERDALE ENTERPRISE PARK,
KENTS LANE, SILVERDALE,
NEWCASTLE-UNDER-LYME,
STAFFORDSHIRE, ST5 6SR.

- Architecture
- Structural Design Services
- Building, Construction and Property Consultants
- Surveying and Project Co-Ordination
- Building Litigation and Expert Witness Services

Office Tele No. 01782 - 711144
Mobile Tele No. 07970 - 308358

Email : harrisonwood.consult@gmail.com
Web : www.harrison-wood-architecture.co.uk

Client: MR. N. AND MRS. P. CLOWES	
Project: PROPOSED SINGLE STOREY EXTENSIONS AND ALTERATIONS TO EXISTING BUNGALOW AT 1 WESTWOOD CLOSE, CHEDDLETON, LEEK, STAFFS, ST13 7JW.	
Scale: 1 : 100	Drawing Size: A3
Date: FEBRUARY 2019	Drawn By: MAL
Title: PROPOSED TIMBER GARDEN SHED	
Drawing No: HWA 1609 / 007	Revision: