This drawing is the property of base Architecture & Design Ltd.
It shall not be copied or scanned, in part or whole, without prior
consent of base Architecture and Design.

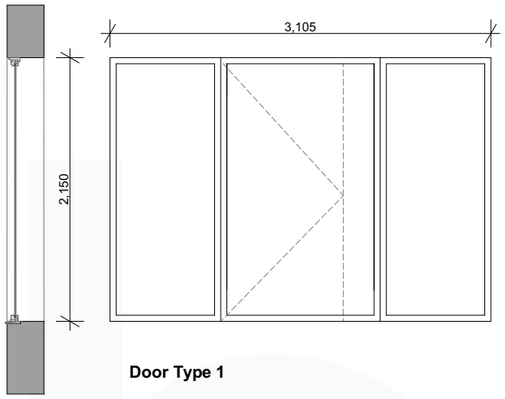

Door Type 1

D-01

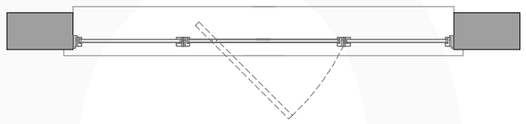

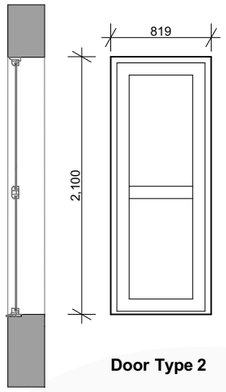

Door Type 2

D-02

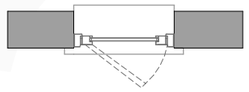

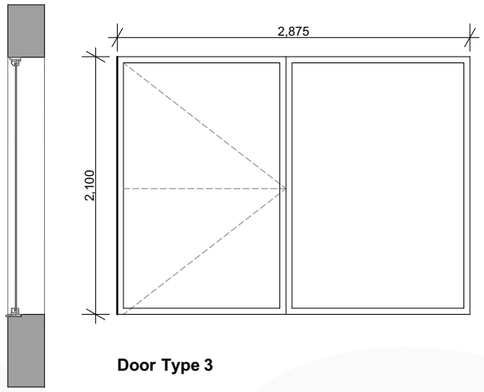

Door Type 3

D-03



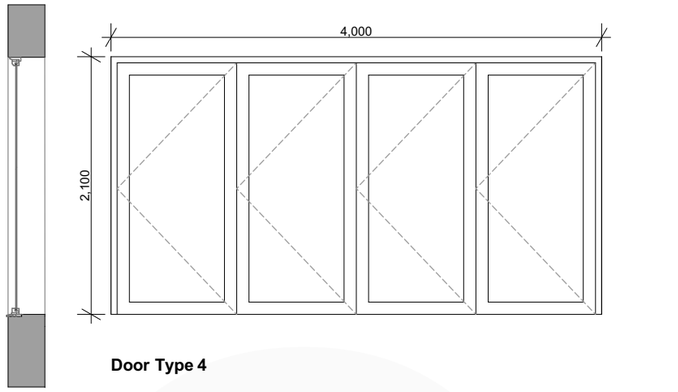

Door Type 4

D-04

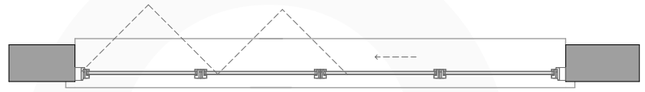

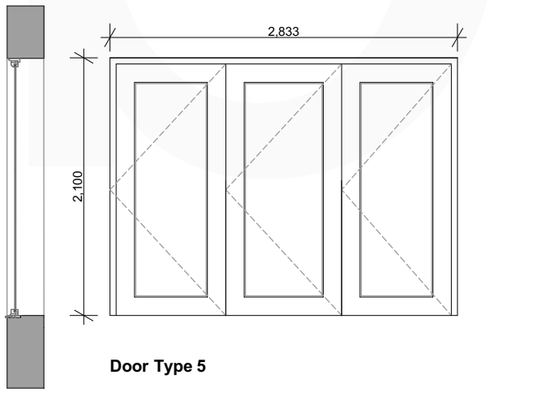

Door Type 5

D-05 D-07
D-06

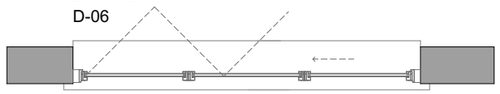

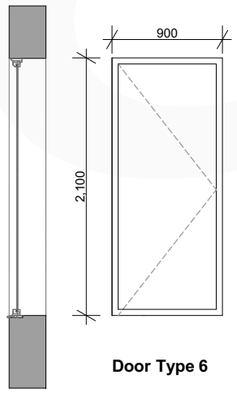

Door Type 6

D-08

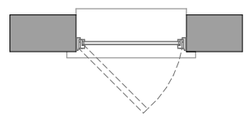

DOOR SCHEDULE

Roof lights to be double glazed and to have low profile painted grey aluminium frames

SCALE BAR 1:50

0 1 2 3 4 5 6 7 8 9 10

Rev No.	Date.	Rev.	By.	Chk.

DISCHARGE OF CONDITIONS

Scale.	Date.	Drawn by.	Chk.
1:50 @ A3	Oct'18	JH	BGE

base. ARCHITECTS

Project Title. HIGHFIELD

Client. MR & MRS PEGG

Drawing Title. **DOOR SCHEDULE**

Project No.	Drawing No.	Revision.
BA1861	DOC-005	-

base Architecture & Design Limited : Unit 1 : NEXUS : Roushill : Shrewsbury : Shropshire : SY1 1PT : T: 01743 236400 : F: 01743 236405 E: office@basearchitecture.co.uk

base Architecture and Design is a registered Limited Company