

South West Elevation



North East Elevation

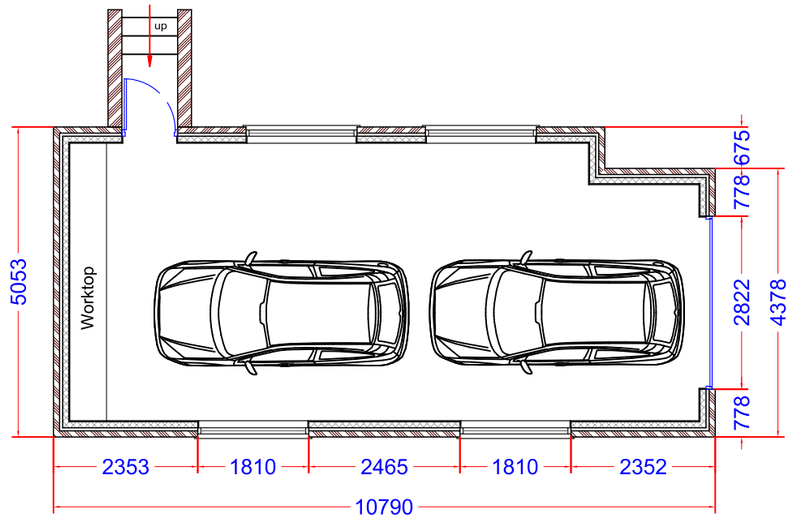

Ground floor plan

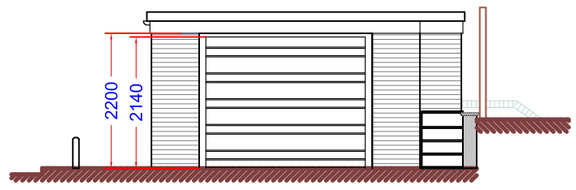

South East Elevation

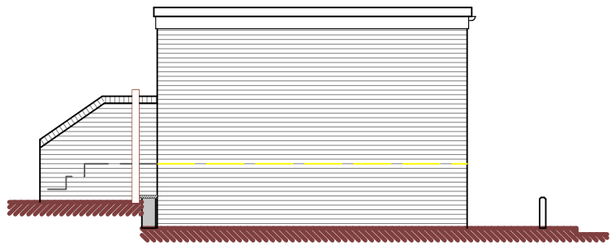

North West Elevation

DBD Architectural Consultancy Ltd ©2018

1. Copyright is vested with DBD Architectural Consultancy Ltd.

2. All dimensions to be checked on site before proceeding.

3. Contractor to check/adjust dimensions of new work to suit existing conditions.
Do not assume existing structure or details are plumb, square or level.

4. Contractor must notify the architect of any discrepancies before proceeding.

5. All drawings to be read in conjunction with all other consultants drawings and specs.

Rev	Date	Description
B	29.01.19	Added side door and remove windows
A	25.01.19	Height Dimensions Added

DBD Architectural Consultancy

DBD Architectural Consultancy Ltd
50 Broad Street, Leek,
Staffordshire, ST13 5NS
01538 383118
mail@dbdconsultants.co.uk
www.dbdconsultants.co.uk

Mr D Fuller & Ms S Walmsley
1 Badnall close,
Leek, ST13 8HB
Client

Proposed new detached garage
Project

Title
Plans and elevations as proposed

Stage: Planning		
Size: A3	Date: 14.01.19	Job No: 1877-100
Scale: 1:100		
Drawing Number: PL 03B		

Initial draft scheme for comments