Leek Skate Park

Performance Results Version 4.2

Date:	23-10-2018
Designer:	Andy Collins
Description:	5 Philips ClearFlood LED 295w luminaires mounted on 5 lighting columns 8m high. Area Size: 40.2m x 18.9m Columns are 2m back from the playing surface. Total Installed Power = 1.48 Kw 230v power supply required Project Maintenance Factor: 0.90 Upward Light Ratio (ULR) is 0.00

The nominal values shown in this report are the result of precision calculations, based upon precisely positioned luminaires in a fixed relationship to each other and to the area under examination. In practice the values may vary due to tolerances on luminaires, luminaire positioning, reflection properties and electrical supply.

Highlights Floodlighting Ltd
Unit 3 Manor Farm Court
Manor Road
Lower Sundon
LU3 3NZ

Telephone: 01525 874 888
Mobile Phone: 07795 478 595
E-Mail: mail@highlights.co.uk

Table of Contents

1. Project Description 3

1.1 3-D Project Overview 3
1.2 Top Project Overview 4

2. Summary 5

2.1 Project Luminaires 5
2.2 Calculation Results 5

3. Calculation Results 6

3.1 Skate Park: Graphical Table 6
3.2 Skate Park: Iso Contour 7
3.3 Skate Park: Filled Iso Contour 8

4. Luminaire Details 9

4.1 Project Luminaires 9

1. Project Description

1.1 3-D Project Overview

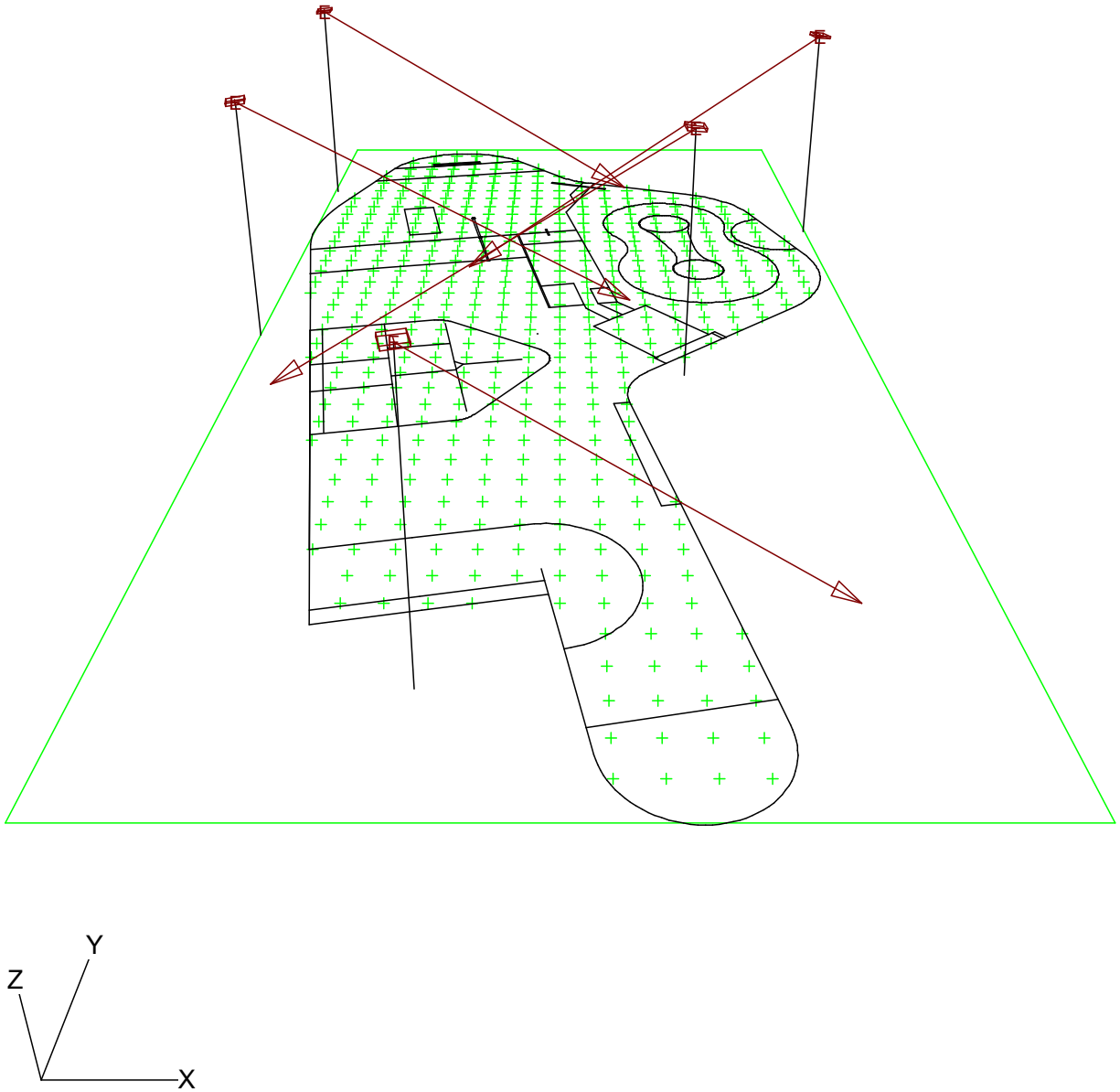

E → BVP650 T25 OFA52

1.2 Top Project Overview

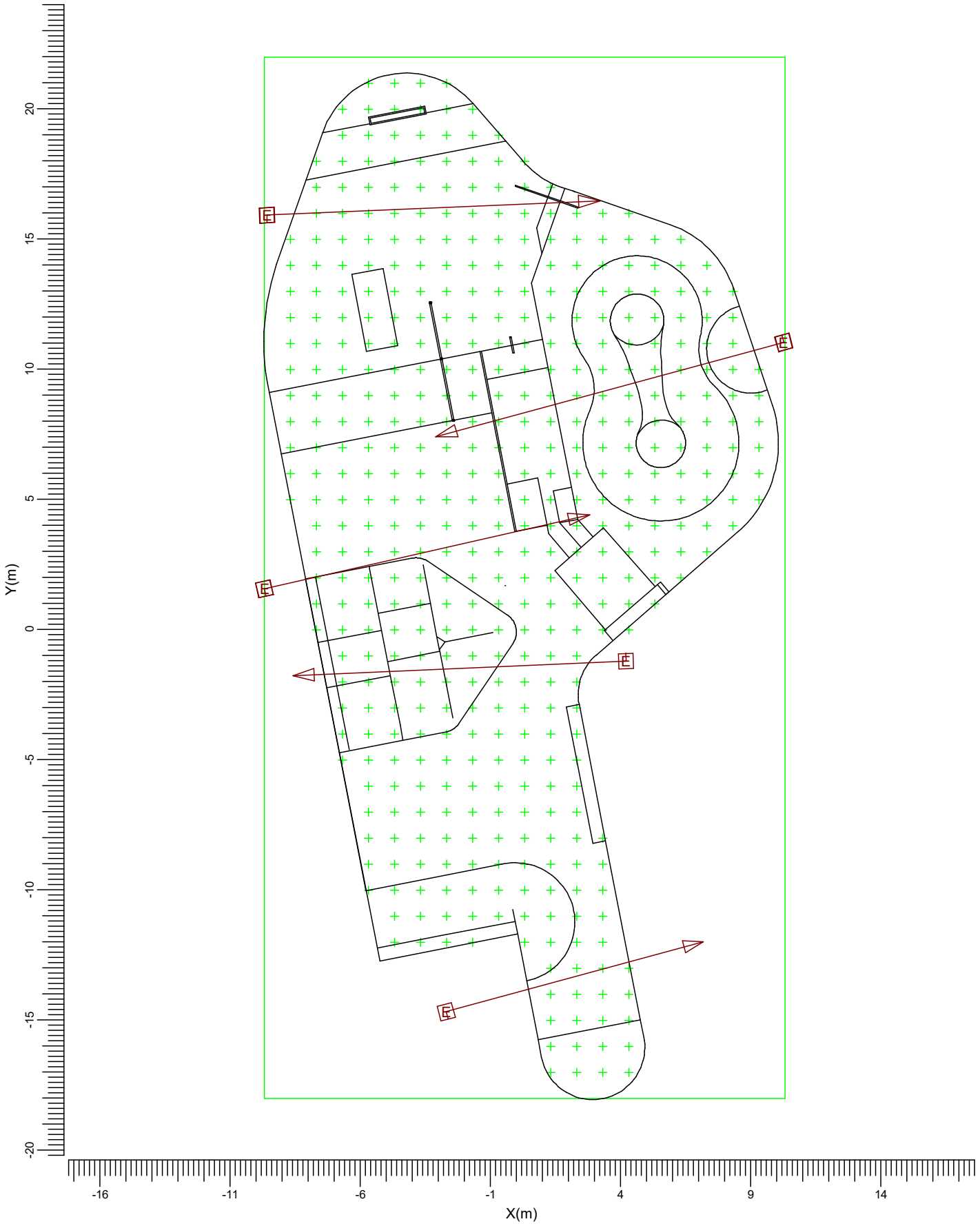

E ⟶ BVP650 T25 OFA52

Scale
1:200

2. Summary

2.1 Project Luminaires

Code	Qty	Luminaire Type	Lamp Type	Power (W)	Flux (lm)
E	5	BVP650 T25 OFA52	1 * LED460-4S/740	295.0	1 * 46000

The total installed power: 1.48 (kWatt)

Number of Luminaires Per Switching Mode:

Switching Mode	Luminaire Code	Power (kWatt)
	E	
Skate Park	5	1.48
Spillage	5	1.48

2.2 Calculation Results

Switching Modes:

Code	Switching Mode	Maintenance factor
1	Skate Park	0.90
2	Spillage	1.00

(Il)luminance Calculations:

Calculation	Switching Mode	Type	Unit	Ave	Min/Ave	Min/Max
Skate Park	1	Surface Illuminance	lux	203	0.60	0.39

Obtrusive Light Calculations:

Switching Mode	ULR
1	0.00
2	0.00

3. Calculation Results

3.1 Skate Park: Graphical Table

Skate Park

Grid : Skate Park at Z = 0.00 m
Calculation : Surface Illuminance (lux)

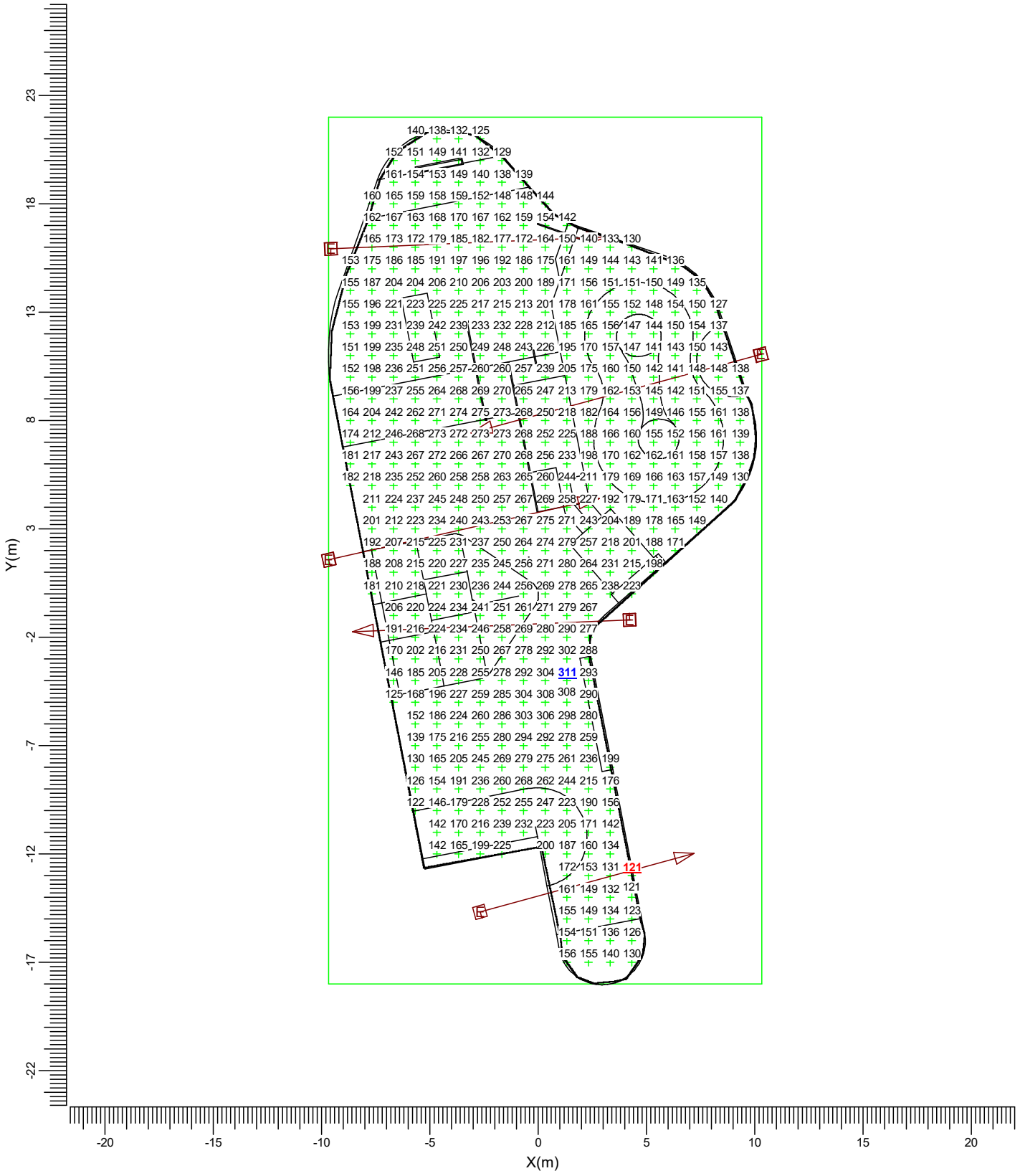

E ⟶ BVP650 T25 OFA52

Average	Min/Ave	Min/Max	Project maintenance factor	Scale
203	0.60	0.39	0.90	1:250

3.2 Skate Park: Iso Contour

Skate Park

Grid : Skate Park at Z = 0.00 m
Calculation : Surface Illuminance (lux)

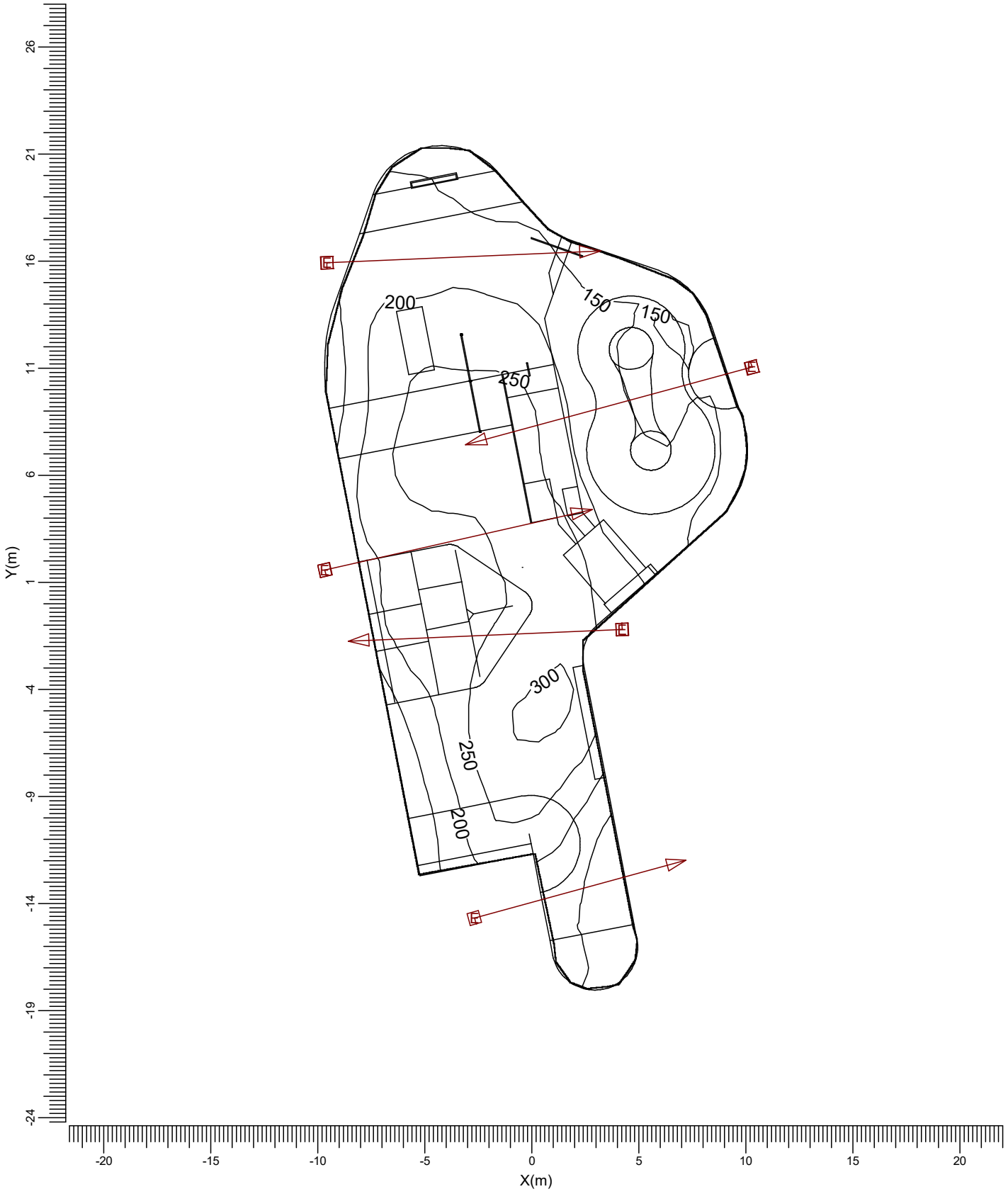

E → BVP650 T25 OFA52

Average	Min/Ave	Min/Max	Project maintenance factor	Scale
203	0.60	0.39	0.90	1:250

3.3 Skate Park: Filled Iso Contour

Skate Park

Grid : Skate Park at Z = 0.00 m
Calculation : Surface Illuminance (lux)

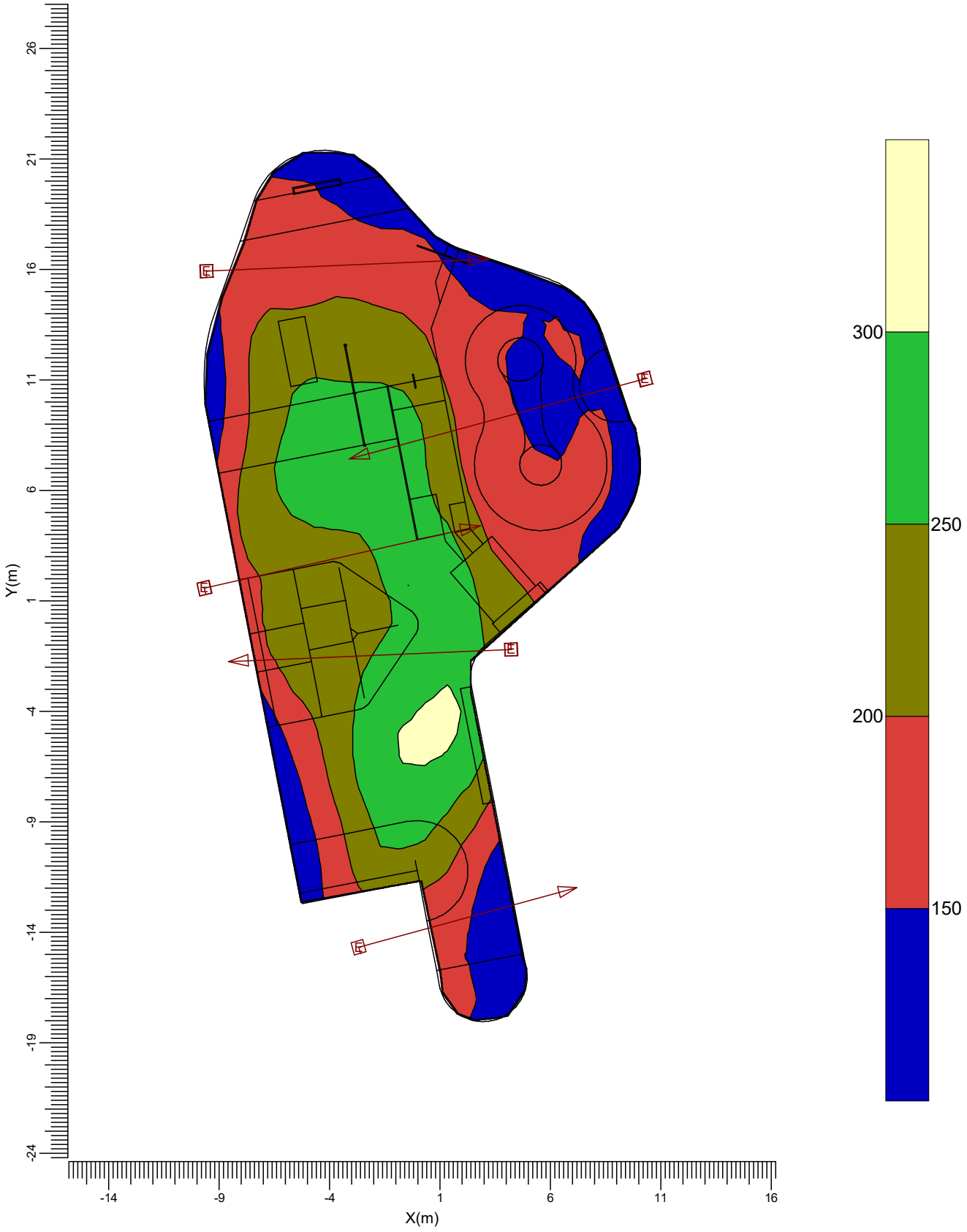

E → BVP650 T25 OFA52

Average	Min/Ave	Min/Max	Project maintenance factor	Scale
203	0.60	0.39	0.90	1:250

4. Luminaire Details

4.1 Project Luminaires

ClearFlood
BVP650 T25 1xLED460-4S/740/- - OFA52

Light output ratios

DLOR	:	0.85
ULOR	:	0.00
TLOR	:	0.85
Ballast	:	-
Lamp flux	:	46000 lm
Luminaire wattage	:	295.0 W
Measurement code	:	LVM1629300

Note: Luminaire data not from database.

