2013, February 6
data subject to change



ClearFlood – LED solution for Sports and Area lighting

ClearFlood

The Philips ClearFlood is a dedicated LED floodlight delivering economical white light solutions for recreational sports and area applications. Designed around state-of-the-art LEDs and high-efficiency optics, this very competitive solution offers significant energy savings compared to traditional HID solutions. ClearFlood is easy to install and perfect for replacing conventional light-points as it uses the same electrical installation, columns and types of fixation.

Benefits

- Designed for 1:1 retrofit, with significant energy savings and a short return on investment
- Slim LED design giving unobtrusive profile and simple installation
- Constant Light Output option for added energy savings

Features

- Variable lumen packages in one body size
- Instant light, long lifetime, no maintenance
- High LED and optical efficiency
- 100% Philips components
- Easy upgrade of gear and LED module

Application

- Small-scale recreational sports facilities
- Industrial areas
- Parking areas
- Building facades
- Billboards

PHILIPS
sense and simplicity

Specifications

- Type: BVP650
- Light source: Integral LED-module
- Power (+/-10%): 50-240 W depending on product
- Luminous flux: 6,000-26,000 lm
- Luminaire efficacy: up to 108 lm/W
- Correlated Colour Temperature: 4000 K
- Colour Rendering Index: 75
- Maintenance of lumen output - L80F10: 50,000 hours
- Operating temperature range: -30 to +40 °C
- Driver: Built-in (self ballasted LED-module)
- Mains voltage: 220-240 V / 50-60 Hz
- Inrush current: 108 A / 140 µs
- Options: Constant light output
- Optic: Symmetrical or asymmetrical
- Optical cover: Glass, flat
- Material: Housing: die-cast aluminum
Cover: glass
- Colour: Grey aluminium (RAL9007)
- Connection: Cable with 3 wires
- Maintenance: From below by opening the housing with a single quick-release clip
- Installation: Stirrup fixation
Max adjustment from the horizontal: -170 to +170°
Max vertical aiming: 0 to +360°

Related products



ClearFlood BVP650 floodlighting luminaire

Dimensional drawing

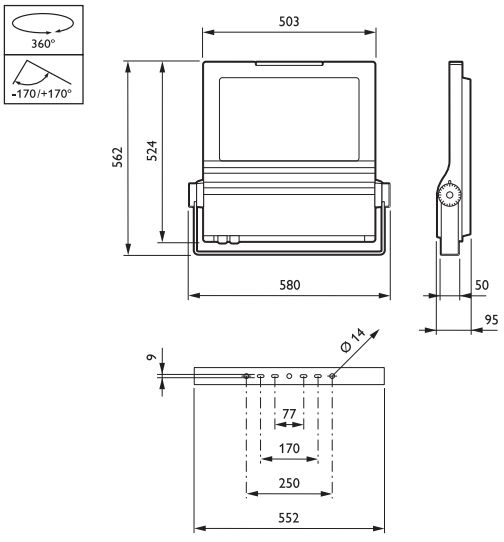

BVP650 ECO6K/740 S ALU

Dimensional drawing

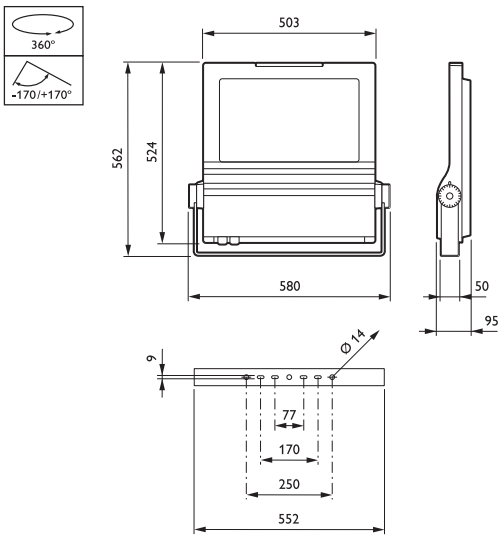

BVP650 ECO6K/740 S ALU

Product details

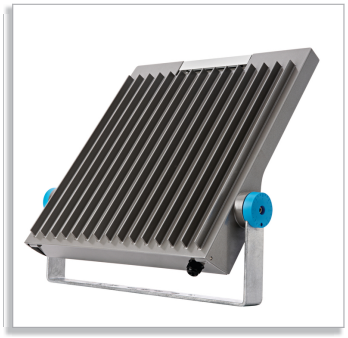

Bracket for mounting/tilting

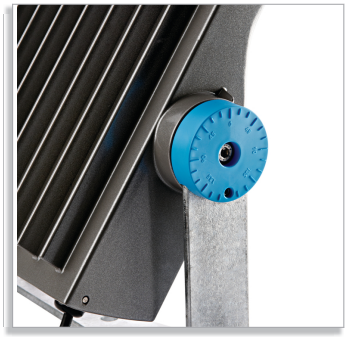

LiAS virtual project facilitates aiming of floodlight



Easy to plug in. No tooling required



General information (1/2)

Order code	Product family code	Number of lamps	Lamp family code	Lamp color code	Color	Optic	Optical cover	European Community mark	Glow-wire test	IK code	Lamp color tempera-ture
170005 00	BVP650	1	ECO	740	ALU	S	FG	CE	960/5	IK09	4000
170036 00	BVP650	1	ECO	740	ALU	S	FG	CE	960/5	IK09	4000
170050 00	BVP650	1	ECO	740	ALU	S	FG	CE	960/5	IK09	4000
170098 00	BVP650	1	ECO	740	ALU	S	FG	CE	960/5	IK09	4000

Order code	Product family code	Number of lamps	Lamp family code	Lamp color code	Color	Optic	Optical cover	European Community mark	Glow-wire test	IK code	Lamp color tempera-ture
170104 00	BVP650	1	ECO	740	ALU	S	FG	CE	960/5	IK09	4000
170111 00	BVP650	1	ECO	740	ALU	A	FG	CE	960/5	IK09	4000
170142 00	BVP650	1	ECO	740	ALU	A	FG	CE	960/5	IK09	4000
170173 00	BVP650	1	ECO	740	ALU	A	FG	CE	960/5	IK09	4000
170203 00	BVP650	1	ECO	740	ALU	A	FG	CE	960/5	IK09	4000
170210 00	BVP650	1	ECO	740	ALU	A	FG	CE	960/5	IK09	4000

General information (2/2)

Order code	Product family code	Coating	Light source replaceable	Driver included	Dimmable	Rated life to 80% lum. flux
170005 00	BVP650	SL-PDR	true	true	false	50000 hr
170036 00	BVP650	SL-PDR	true	true	false	50000 hr
170050 00	BVP650	SL-PDR	true	true	false	50000 hr
170098 00	BVP650	SL-PDR	true	true	false	50000 hr
170104 00	BVP650	SL-PDR	true	true	false	50000 hr
170111 00	BVP650	SL-PDR	true	true	false	50000 hr
170142 00	BVP650	SL-PDR	true	true	false	50000 hr
170173 00	BVP650	SL-PDR	true	true	false	50000 hr
170203 00	BVP650	SL-PDR	true	true	false	50000 hr
170210 00	BVP650	SL-PDR	true	true	false	50000 hr

Light technical

Order code	Product family code	Total luminous flux	Luminous efficacy	Color rendering index
170005 00	BVP650	4500 Lm	90 Lm/W	75
170036 00	BVP650	9900 Lm	90 Lm/W	75
170050 00	BVP650	14130 Lm	90 Lm/W	75
170098 00	BVP650	21240 Lm	90 Lm/W	75
170104 00	BVP650	23220 Lm	90 Lm/W	75
170111 00	BVP650	4500 Lm	90 Lm/W	75

Order code	Product family code	Total luminous flux	Luminous efficacy	Color rendering index
170142 00	BVP650	9900 Lm	90 Lm/W	75
170173 00	BVP650	16380 Lm	90 Lm/W	75
170203 00	BVP650	21240 Lm	90 Lm/W	75
170210 00	BVP650	23220 Lm	90 Lm/W	75

© 2013 Koninklijke Philips Electronics N.V.
All rights reserved.

Specifications are subject to change without notice. Trademarks are the property of Koninklijke Philips Electronics N.V. or their respective owners.

www.philips.com/lighting

2013, February 6
data subject to change