Window Details

Dwelling on Brownfield Land, Underhill, Biddulph Moor, ref SMD/2018/0018

Window Manufacturer:	Solidor
Window Supplier:	Tradelink Direct
Window Colour:	Painswick Grey - RAL 3078
Window Style:	Residence 7 flush casements
Window Construction:	UPVC thermoplastic skin
Window thickness:	75.0mm
Frame Thickness:	75.0mm
Frame recess:	100.0 - 70.0 = 30.0mm
Dimensions:	Various

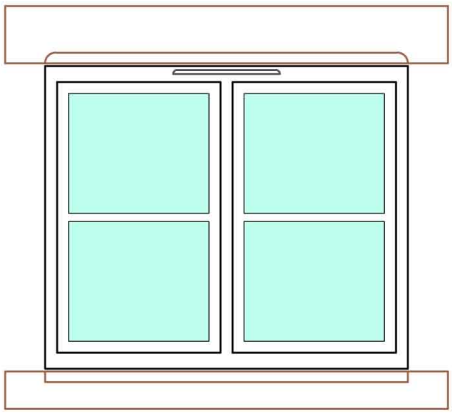

Illustration

R7002 Residence 7 Frame

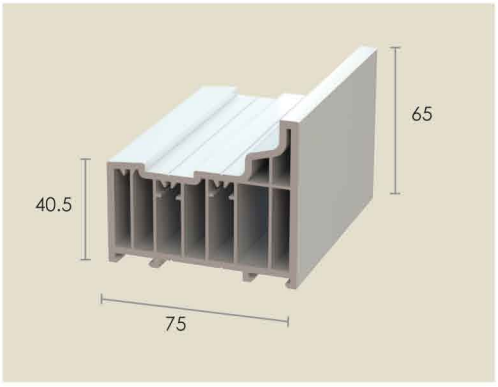

R001 M Residence 7 Transom/Mullion

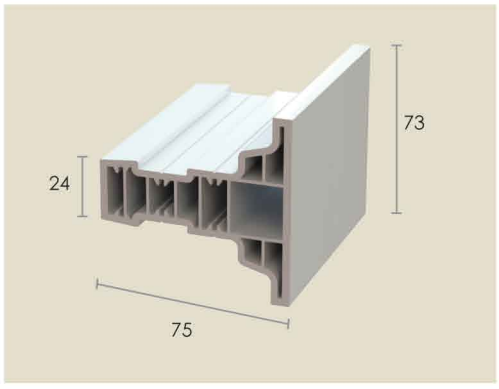

R202 Georgian Bar
Use externally with
all sashes

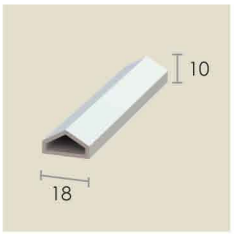

R201 Georgian Bar
Use internally with
all sashes

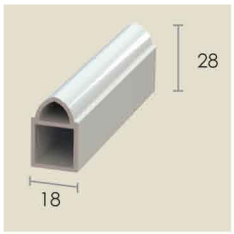

Sectional Details

Extract from Manufacturer's Brochure

FEATURES & PERFORMANCE

Market Leading Design for Modern Living

Easy-clean Rebate

Intelligently designed with an 'easy-clean' frame rebate, open your windows or doors and simply wipe clean, no sharp corners or deep grooves attracting dirt. We also have a variety of coloured bases, as an example; choose Eclectic Grey inside and out, you get a dark grey rebate to match! A uniquely clever design, for modern living.

Lock & Hinge Retention

Residence 7 boasts superior design details and screw retention reinforcements, locks and hinges are secured firmly into position. Residence 7 is also specifically designed to accommodate the additional weight of triple glazed units, allowing heavy duty hinges to fit and operate perfectly.

Energy Efficient Glazing

Residence 7 is designed to accommodate 'energy efficient glazing' this term is used to describe double glazing or triple glazing used in modern windows. Residence 7 has options for 28mm double glazing or 44mm triple glazing. The glazing bead is always on the inside which contributes to a higher security performance.

7 Chamber Design

Residence 7 has been engineered to meet current and anticipated future standards. Other window frames typically offer 3 or 5 chambers and are usually 70mm wide, R7 has 7 chambers and is 75mm wide, resulting in superior thermal, acoustic, strength and security performances.

