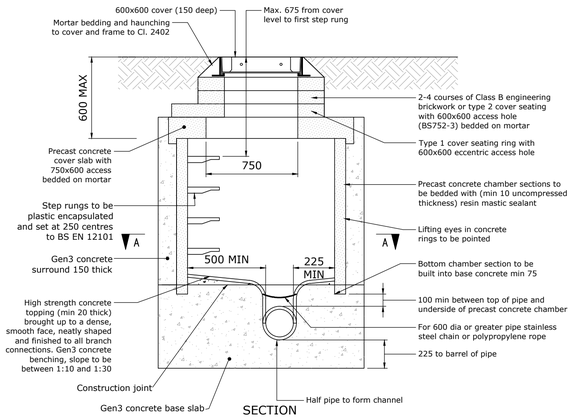

Sewers for Adoption 7th Edition Manhole Detail
TYPE 2: Maximum depth to soffit of pipe 3.0m

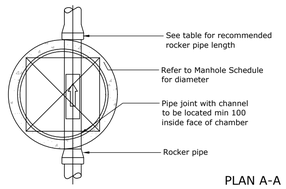

PLAN A-A

Rocker Pipe Lengths	
Nominal Diameter (mm)	Length
150-600	600
601-750	1000
over 750	1250

Drawing	Revision/Index	Detail	Company
05.67	Rev B	Precast Concrete Gully - Types 2	Staffordshire County Council
05.71	Rev A	Surface Water Drains - Connecting to Existing Piped Drain	Staffordshire County Council

Road Gully and Gully Connection Details

Soft Landscape
ST1 Concrete haunch
100
100
100