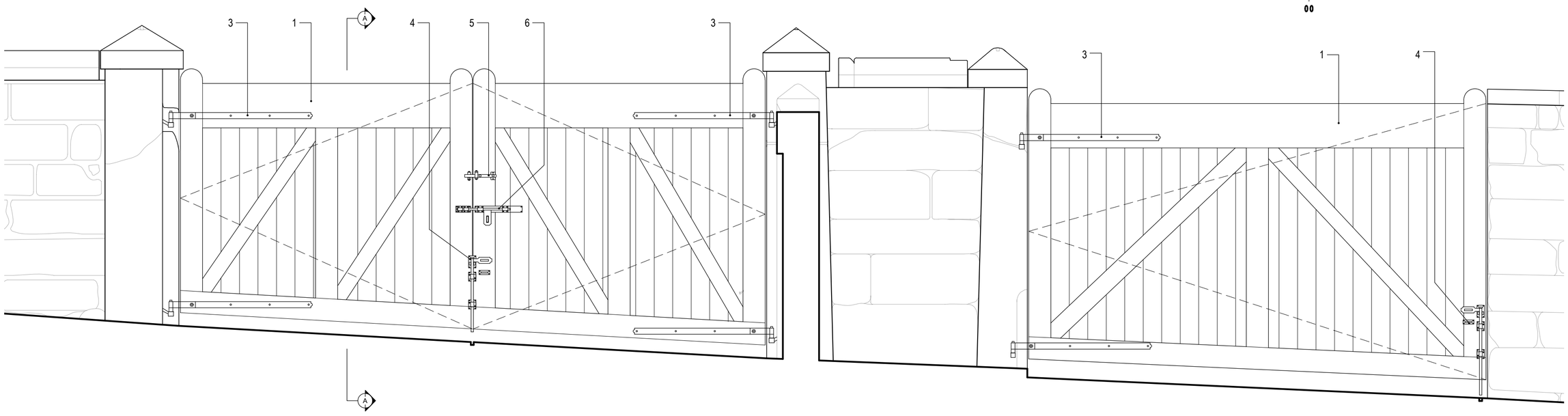

west elevation to courtyards 1:20

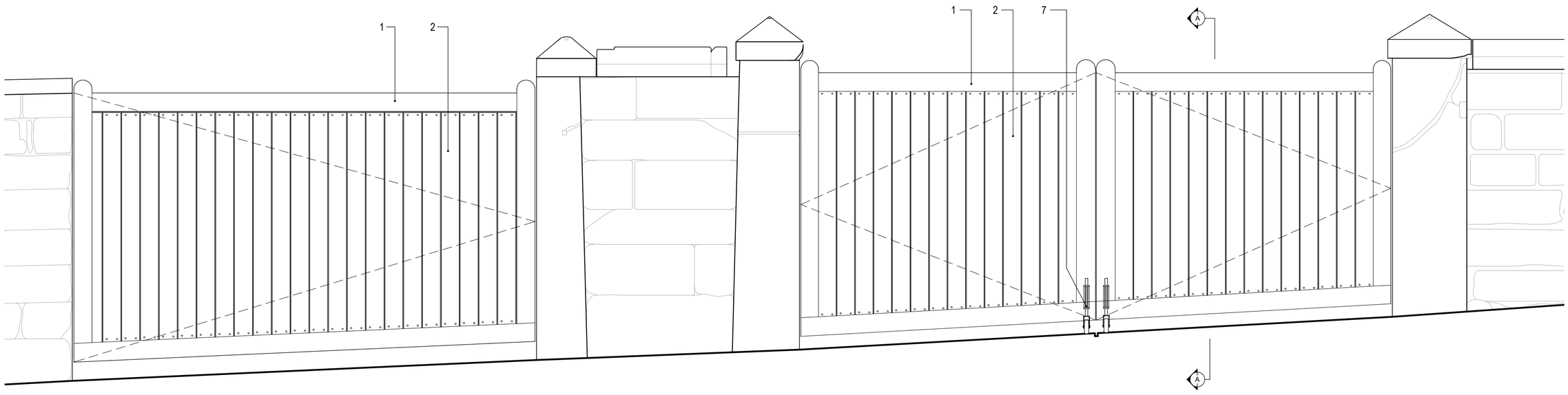

east elevation to malthouse road 1:20

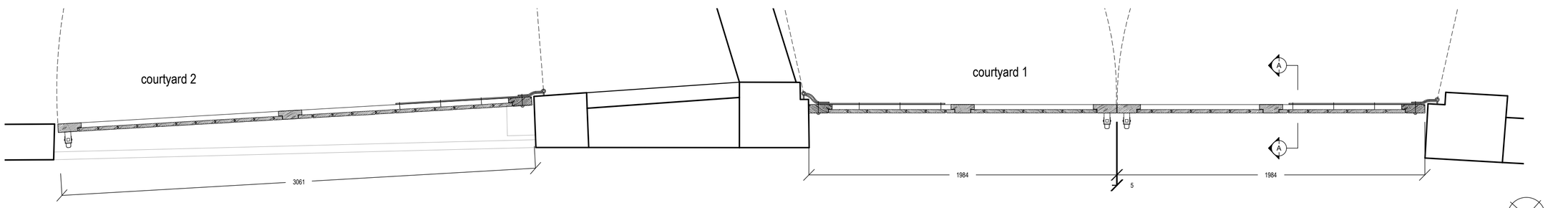

boundary wall plan 1:20

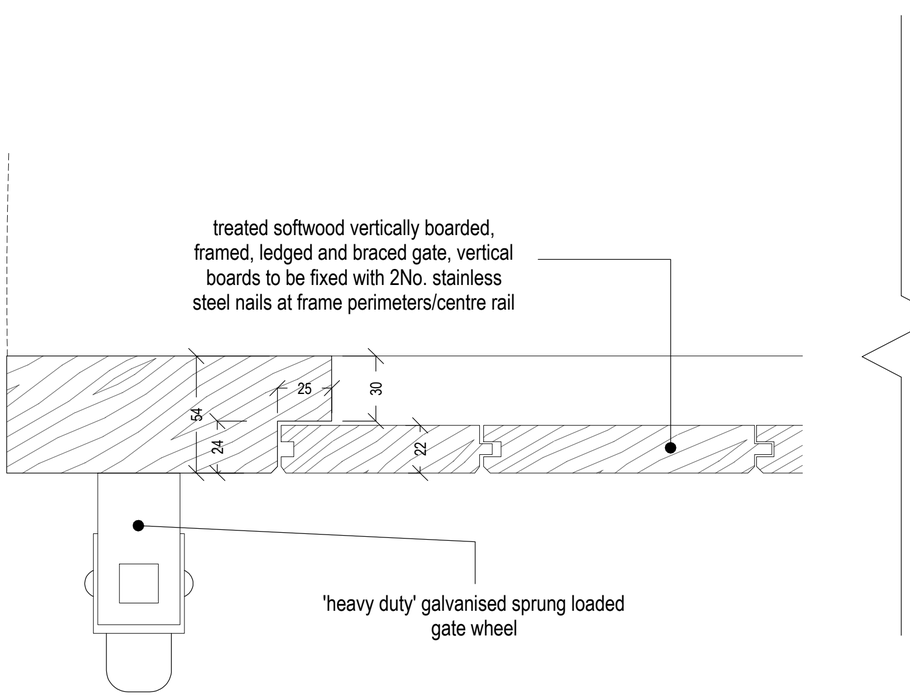

typical meeting stile detail
scale 1:2

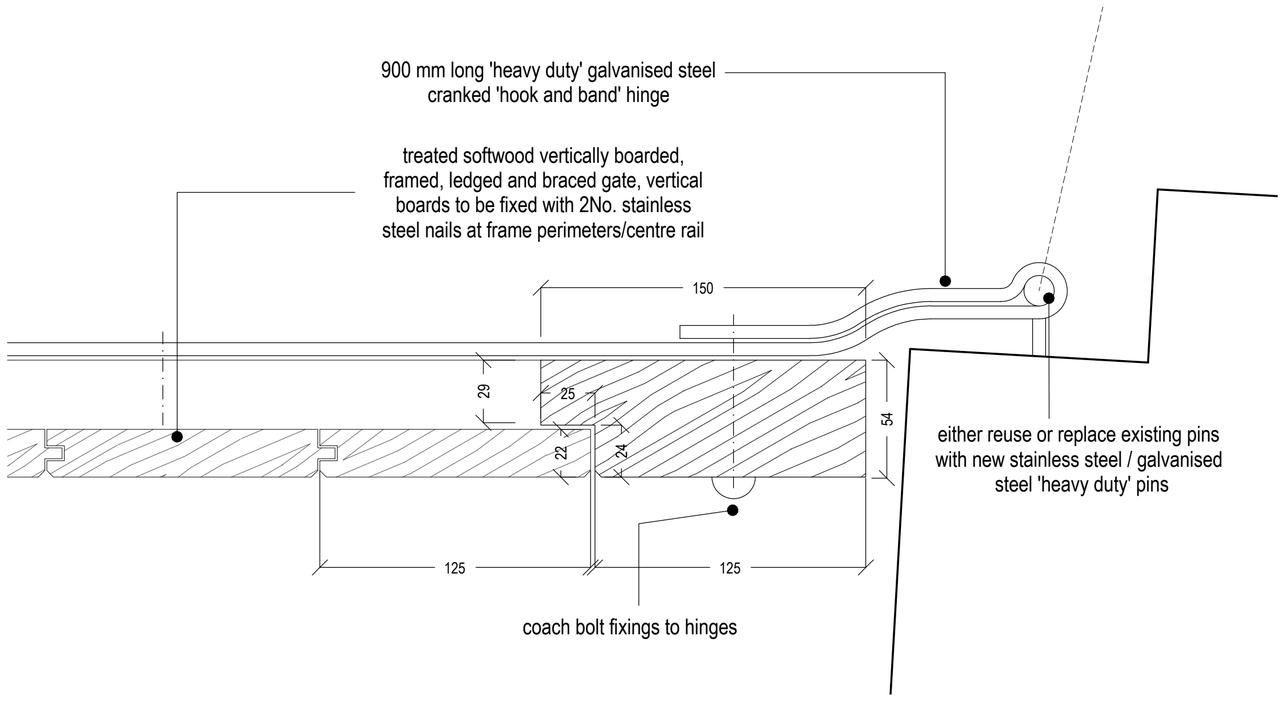

typical jamb detail
scale 1:2

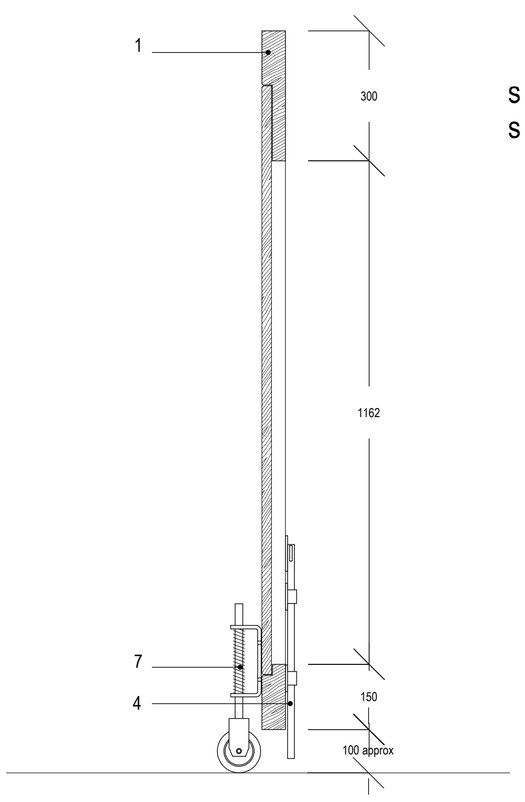

section A-A: typical section
scale 1:10

NOTES:

1 - treated softwood vertically boarded, framed, ledged and braced gate, 'V'-jointed tongue-and-grooved, vertical boards to be fixed with 2No. stainless steel nails at frame perimeters / centre rail

2 - 125mm x 22mm painted treated 'v-jointed' vertical timber boarding fixed with 2No. stainless steel nails per rail

3 - 900mm long 'heavy-duty' galvanised cranked 'hook and band' hinge

4 - 'heavy duty' 600mm galvanised locking drop bolt

5 - 'heavy duty' galvanised suffolk thumb latch (if required)

6 - 'heavy duty' 300mm galvanised padlock bolt

7 - 'heavy duty' galvanised sprung loaded gate wheel

Rev	Date	Drawn	Description
-	-	-	-

ctd architects
Clerk Bank House
Clerk Bank
LEEK
Staffordshire
ST13 5HE
t : 01538 373477
f : 01538 386503
e : info@ctdarchitects.co.uk
w : www.ctdarchitects.co.uk

ctd architects © 2018
- This drawing is copyright.
- All dimensions to be checked on site before proceeding.
- Contractor must notify the architect of any discrepancies before proceeding.
- Contractor to check/adjust dimensions of new work to suit existing conditions. Do not assume existing structure or details are plumb, square or level.
- All drawings to be read in conjunction with all other consultants drawings and specs.

Client: Dr. Gary Kelsall

Project: The Malthouse
Malthouse Road, ALTON, Staffs, ST10 4AG

Title: Boundary Gate Details 'as proposed'

Scale	Size	Drawn	Chk'd	Date
1:20/10/2	A1	ED	CH	29/10/18

Status: PLANNING AND LBC

Job No.	Drawing No.	Rev.
1813	AL13	-