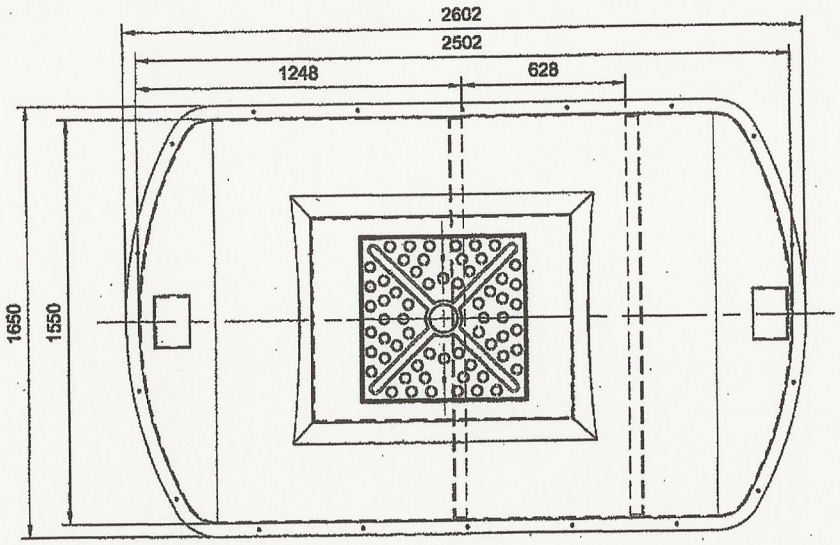

PLAN

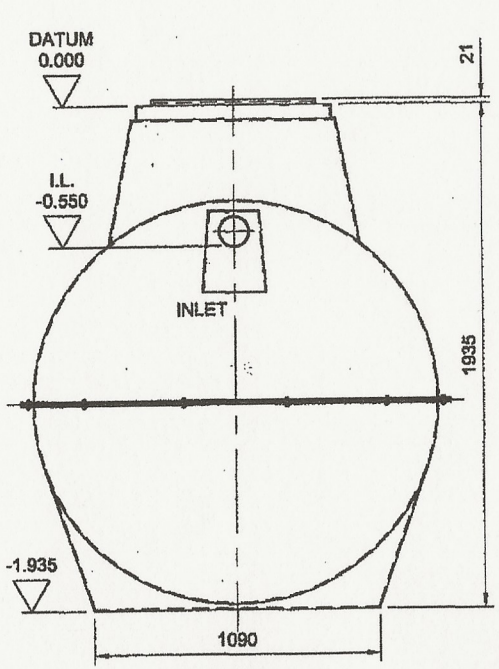

VIEW ON INLET END

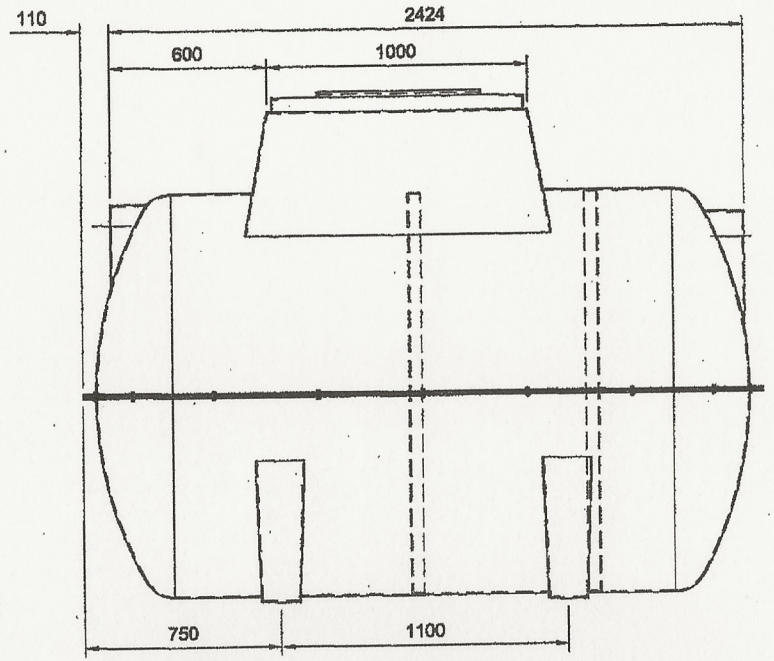

SIDE ELEVATION

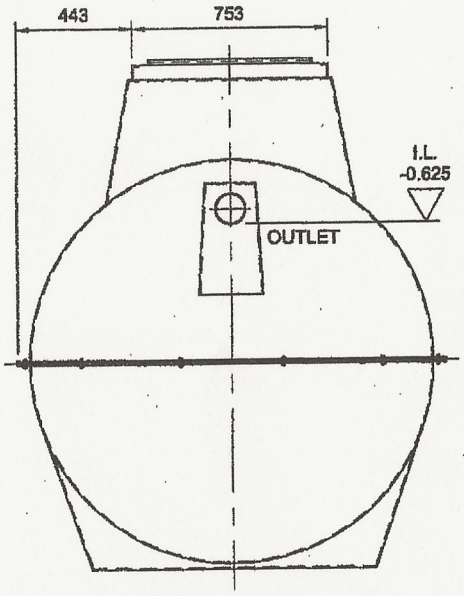

VIEW ON OUTLET END

REV	DESCRIPTION	DATE	DR	REV	DESCRIPTION	DATE	DR	REV	DESCRIPTION	DATE	DR
								A	For Approval		

THIS DRAWING IS THE PROPERTY OF MARSH INDUSTRIES LTD. AND MUST NOT BE REPRODUCED OR CIRCULATED FOR ANY PURPOSE WHATSOEVER WITHOUT FIRST OBTAINING WRITTEN CONSENT FROM THE MARSH INDUSTRIES LTD.

DRG.	CHKD	APP'D
MUNRO DRAUGHTING Ltd.	SCALE	DATE

3 RD ANGLE PROJECTION

CLASS 1

TITLE

UNI:ENSIGN
6 (SIX PERSONS)
EN12566-3:2011

MARSH INDUSTRIES LTD.

UNITS 9-13 ADDINGTON PARK IND. EST., LITTLE ADDINGTON, KETTERING, NORTHAMPTONSHIRE, NN14 4AS.

DRG. | REV A