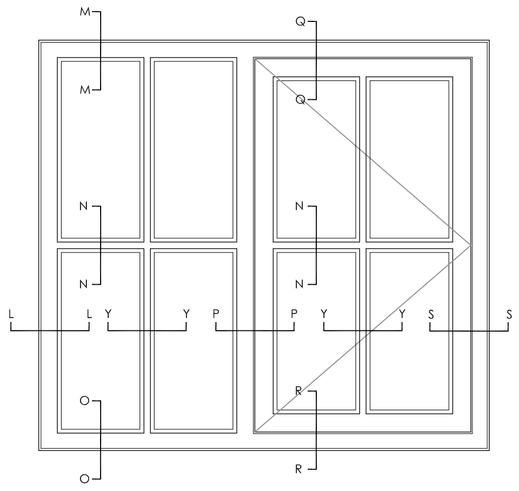

Timber Conservation Casement Style Window 1:10

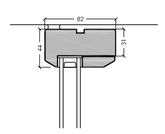

Detail MM 1:5

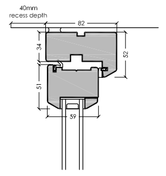

Detail QQ 1:5

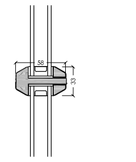

Detail NN 1:5

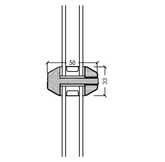

Detail NN 1:5

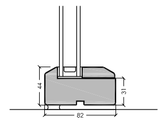

Detail OO 1:5

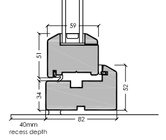

Detail RR 1:5

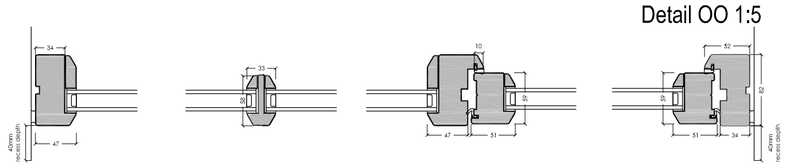

Detail LL 1:5 Detail YY 1:5 Detail PP 1:5 Detail SS 1:5

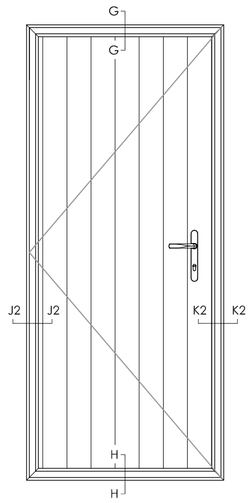

Composite Door 1:20

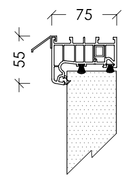

Detail GG 1:5

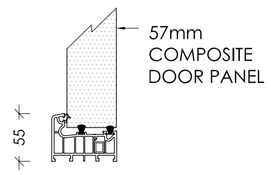

Detail HH 1:5

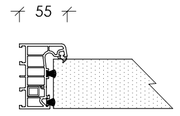

Detail J2J2 1:5

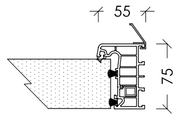

Detail K2K2 1:5

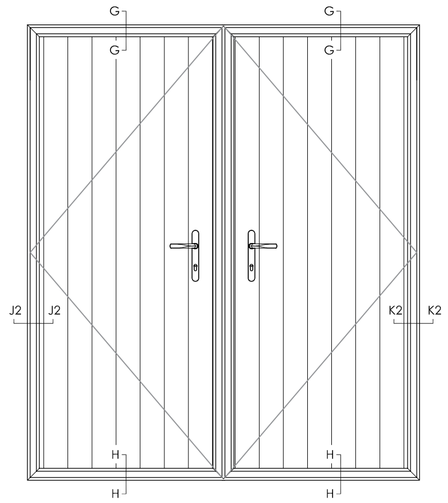

Composite Double Door 1:20

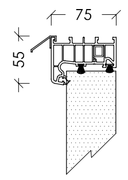

Detail GG 1:5

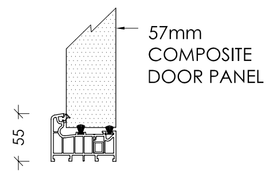

Detail HH 1:5

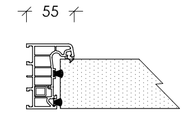

Detail J2J2 1:5

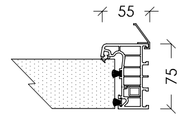

Detail K2K2 1:5

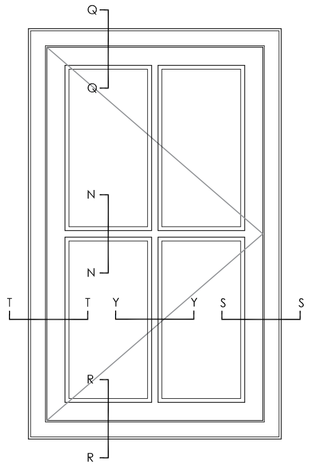

Timber Conservation Casement Style Window 1:10

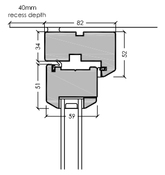

Detail QQ 1:5

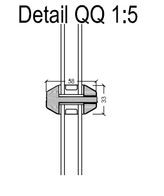

Detail NN 1:5

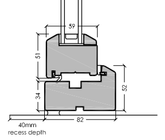

Detail RR 1:5

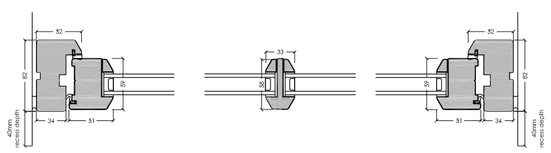

Detail TT 1:5 Detail YY 1:5 Detail SS 1:5

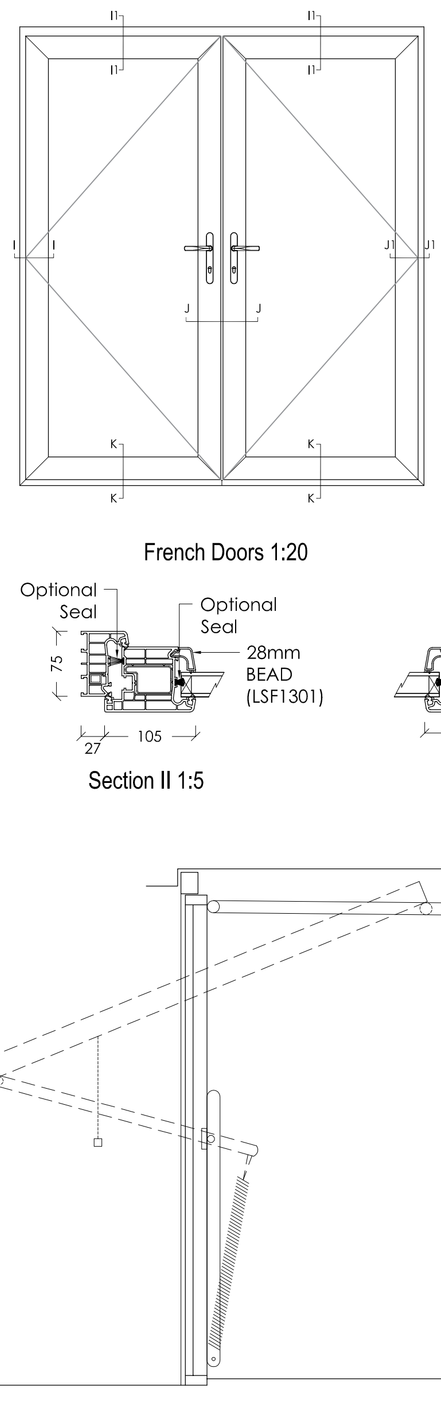

French Doors 1:20

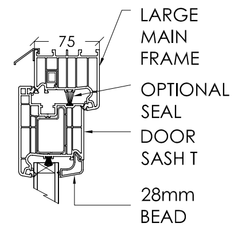

Section I1I1 1:5

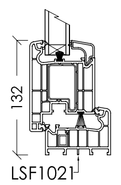

Section KK 1:5

Section II 1:5

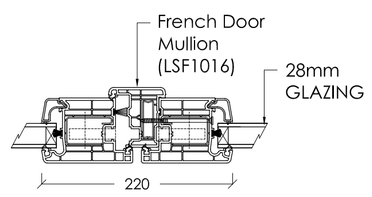

Section JJ 1:5

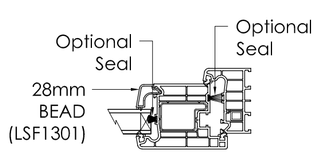

Section J1J1 1:5

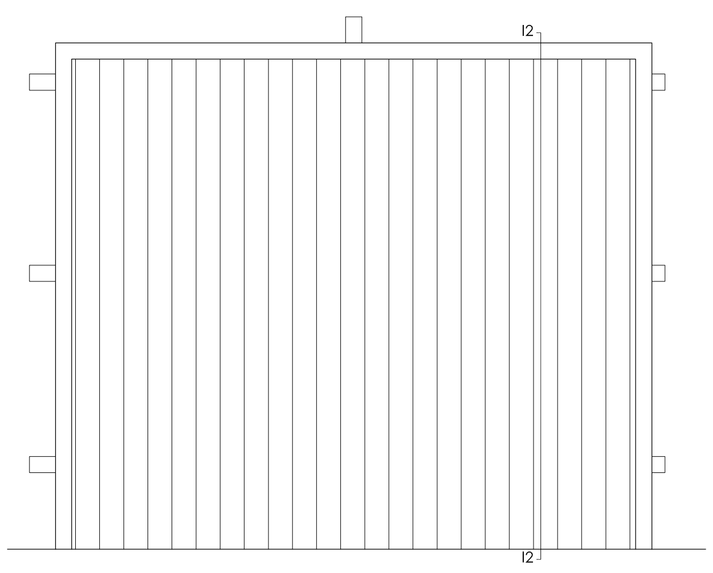

Garage Door 1:20

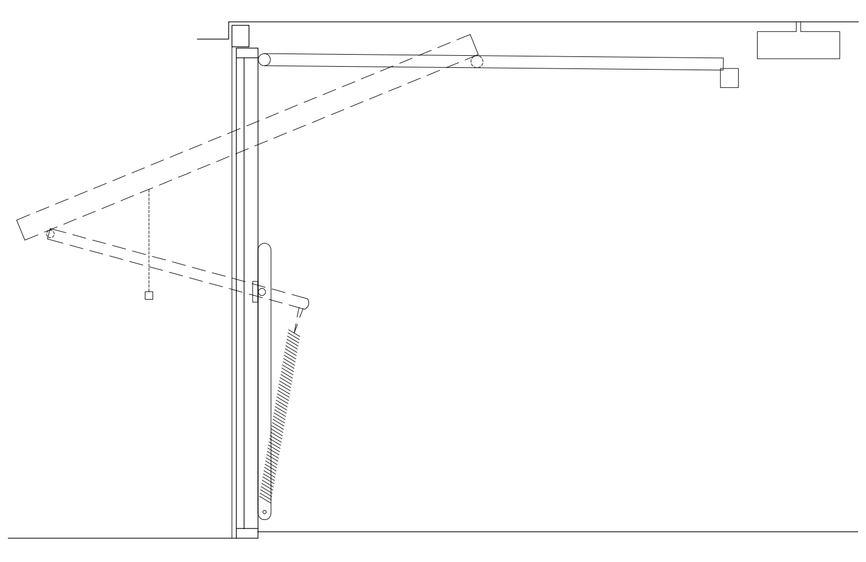

Detail I2I2 1:20

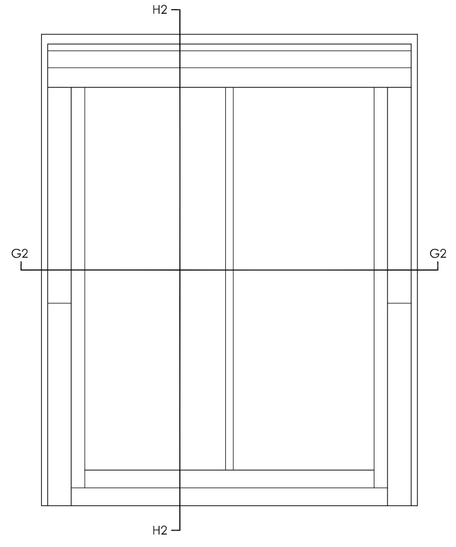

Roof Window 1:10

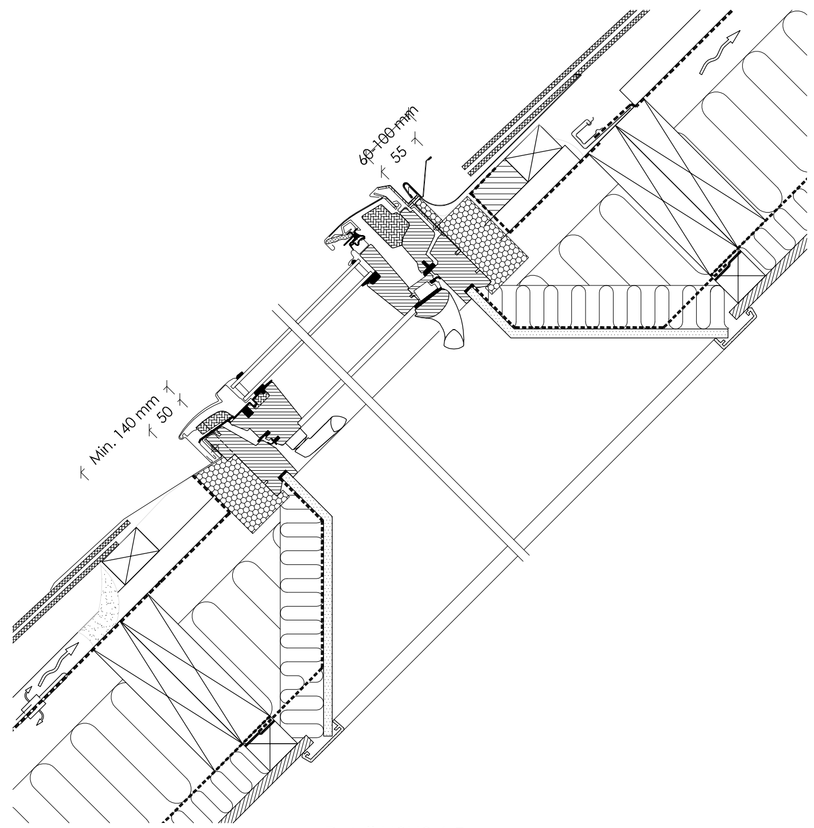

Detail H2H2 1:5

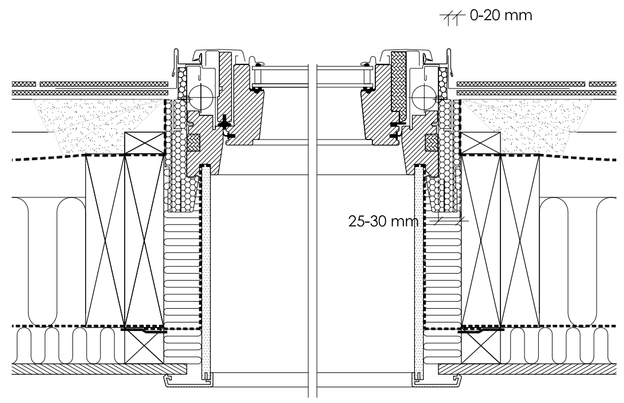

Detail G2G2 1:5

Copyright of this drawing is vested in the Architect and it must not be copied or reproduced without consent. Figured dimensions only are to be taken from this drawing. All contractors must visit the site and be responsible for taking and checking all dimensions relative to their work. Hewitt&Carr Architects Ltd are to be advised of any variation between drawings and site conditions.
CLIENTS ARE ADVISED TO CLARIFY DIMENSIONS WITH THE ARCHITECT PRIOR TO SETTING OUT AND NOT TO SCALE FROM THE DRAWING

Rev.	Drawn	Comments	Date

Hewitt&Carr Architects
A: 2-4 Cross Street I Cheadle I Staffordshire I ST10 1NP
T: 01538 756888
E: enquiries@hcarchitects.co.uk
W: www.hcarchitects.co.uk

Client
Enhances Developments Ltd.

Project
Window & Door Details for Development at Anzio Camp, Blackshaw Moor
SMD/2014/0683 & DOC/2018/0102

Title
Window & Door Details for :
Facilities Building

PLANNING

Status
Planning

Date SEP 2018 Drawn BVC

Scale @A1 As Stated Checked

Project No 00824 Drawing No. AL(0)04 Rev

File Ref: H:\REF